MK02 Series Reed Sensors

- **Features: Ferrous Metal Detection, Front or Above Operation, Choice of Cable Termination & Lengths**
- **Applications: Door & Window Control, Fire Protection Doors, Safety & Interlock Sensing & Others**
- **Markets: Appliance, Industrial, Security & Others**

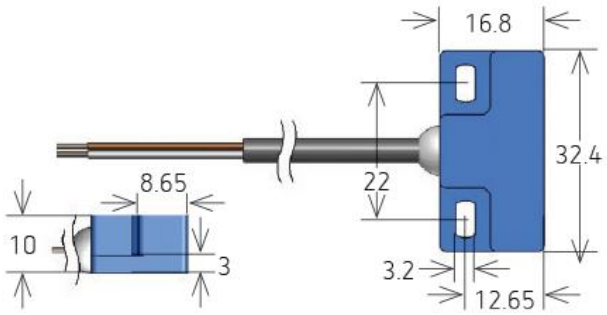

Part Description: MK02/0-XA00-000X

Operation Series	Contact Qty	Contact Form	Switch Model	Cable Length (mm)	Termination
0, 1, 2, 3, 4	1	A, B, C	66, 90	200, 300, 500, 1000, 1500, 2000, 3000, 5000	W = Stripped & Tinned

Customer Options	Switch Model		Unit
Contact Data	66	90	
Rated Power (max.) Any DC combination of V&A not to exceed their individual max.'s	10	10	W
Switching Voltage (max.) DC or peak AC	180	175	V
Switching Current (max.) DC or peak AC	0.5	0.5	A
Carry Current (max.) DC or peak AC	1.25	1.0	A
Contact Resistance (max.) @ 0.5V & 50mA	150	150	mOhm
Breakdown Voltage (min.) According to EN60255-5	0.25	0.2	kVDC
Operating Time (max.) Incl. Bounce; Measured with w/ Nominal Voltage	0.7	0.7	ms
Release Time (max.) Measured with no Coil Excitation	0.05	1.5	ms
Insulation Resistance (typ.) Rh<45%, 100V Test Voltage	10^{10}	10^{9}	Ohm
Capacitance (typ.) @ 10kHz across open Switch	0.3	1.5	pF

USA: +1 866.782.6339 | salesusa@standexmeder.com EMEA: +49 7731/8399-0 | info@standexmeder.com APAC: +86 21/37606000 | salesasia@standexmeder.com

MK02 Series Reed Sensors

Housing and Lead Specifications

Housing Material	PBT Glass Fiber Reinforced
Case Color	Blue
Sealing Compound	Polyurethane
Cable Type	Round Cable
Cable Material	PVC
Cross Section (mm^2)	4 x 0.14 / 2 x 0.25

Environmental Data		Unit
Shock Resistance (max.) 1/2 sine wave duration 11ms	50	g
Vibration Resistance (max.)	20	g
Operating Temperature Cable not moved	-30 to 80	°C
Operating Temperature Cable moved	-5 to 80	°C
Storage Temperature	-30 to 80	°C

Glossary Contact Form

Form A	NO = Normally Open Contacts SPST = Single Pole Single Throw	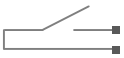
Form B	NC = Normally Closed Contacts SPST = Single Pole Single Throw	
Form C	Changeover SPDT = Single Pole Double Throw	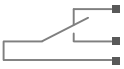

Handling & Assembly Instructions

- Max torque of screw is 1Nm
- Cable bending-radius is diameter x 15
- Min. bending distance to housing is 5mm
- Drag mark out of the mounting area forbidden
- Decrease switching distance by mounting on iron
- Do not use magnetically inductive screws
- Series resistor recommended for > 5m cable length

Layout

Top View

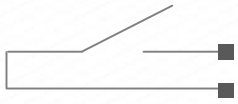

Glossary Magnetic Sensitivity

Sens.	A	B	C	D	E	F	G
AT	05-10	10-15	15-20	20-25	25-30	30-35	35-40

MK02 Reed Sensor



Life Test Data

*Load increase reduces life expectancy of Reed Switches

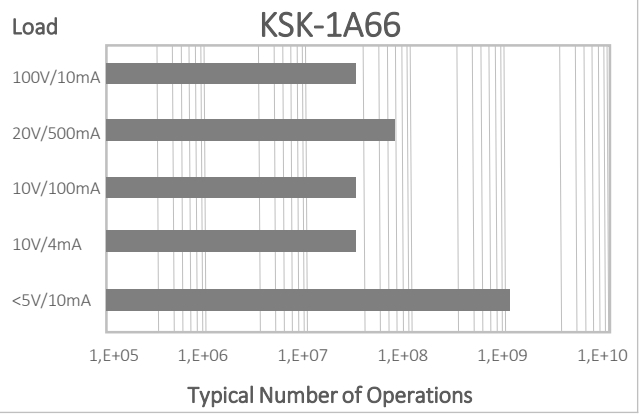

Life Test Data

*Load increase reduces life expectancy of Reed Switches

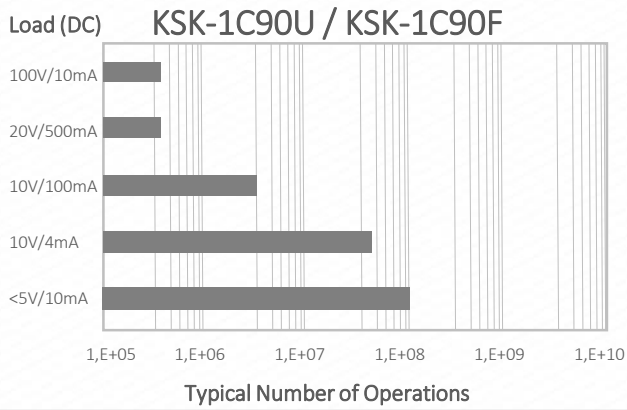

USA: +1 866.782.6339 | salesusa@standexmeder.com EMEA: +49 7731/8399-0 | info@standexmeder.com APAC: +86 21/37606000 | salesasia@standexmeder.com

MK02 Series Reed Sensors

Operation Series – Screw Flange Mount

For best operation it is recommended that you DO NOT mount these sensors on any ferromagnetic material OR use any ferromagnetic screws.

MK02/0 Operation from the Front
MK02/2

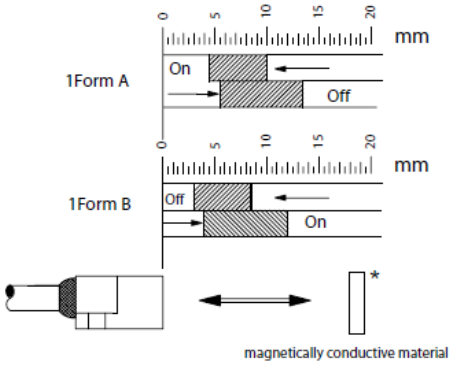

MK02/1 Operation from above
MK02/3

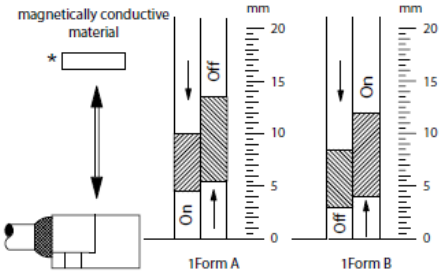

* Dimension (mm): 3 x 12 x 32
The standard cable is a 4-wire round - core 4 x 0.14 mm2 (cable sheath and wires are white) forming a sabotage loop. See example of this loop to the right.

Sabotage loop for MK02/2, MK02/3

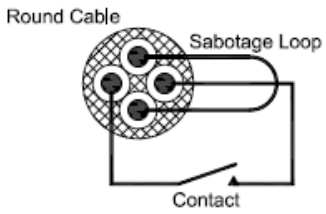

Please note: All technical specifications on this series datasheet refer to the standard product range. Modifications in the sense of technical progress are reserved. For general information only. For more specific information, please consult the product datasheet, available upon request.

This series datasheet could contain technical inaccuracies or typographical errors. Changes are periodically made to the information herein. These change will be incorporated in future revisions.

For deviating values, most current specifications and products please contact your nearest sales office.

USA: +1 866.782.6339 | salesusa@standexmeder.com EMEA: +49 7731/8399-0 | info@standexmeder.com APAC: +86 21/37606000 | salesasia@standexmeder.com