LogiLink PROFESSIONAL

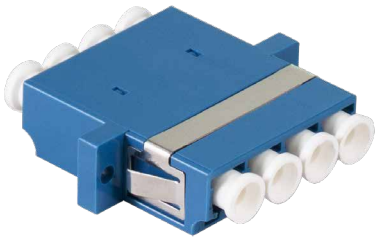

Fiber Optic LC Quad Adapter with Flange, 12 pcs

Art no.: FA04LC8

Technical Features

LC Quad adapter, w/flange

Ceramic Sleeve

Metal clip and white dust cap

Color: Blue

Qty: 12 pcs in one pack

Technical Drawing

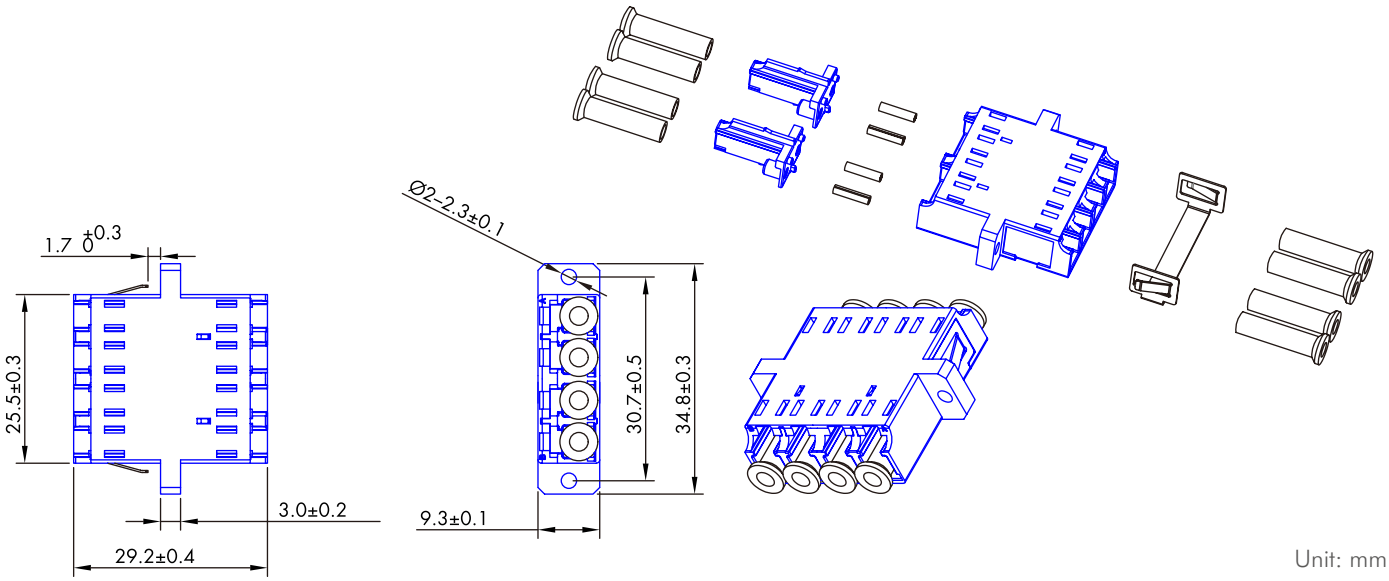

Unit: mm

FA04LC8

4 052792 079845

Made in China

www.2direct.de

*The specifications and pictures are subject to change without prior notice.
*All trade names referenced are the registered trademarks of their respective owners.

Package Content

Fiber Optic LC Adapter, 12 pcs pack x 1

Packaging Information

Packing Dimension	140 x 120 x 15 mm
Packing Weight	0.0785 kg/set
Carton Dimension	450 x 250 x 235 mm
Carton Q'ty	100 sets (12 pcs/set)
Carton Weight	8.35 kg

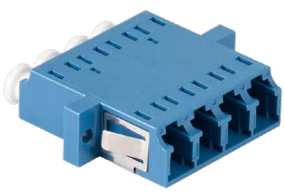

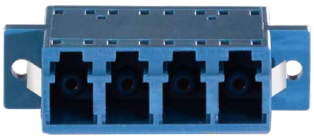

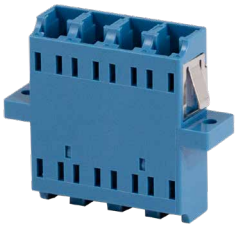

FA04LC8

4 052792 079845

Made in China

www.2direct.de

*The specifications and pictures are subject to change without prior notice.
*All trade names referenced are the registered trademarks of their respective owners.