GP Batteries DATA SHEET

Model No.: GP85AAAHCE

Type	:	Rechargeable Nickel Metal Hydride Cylindrical Cell
Recycled material content		Rechargeable Nickel Metal Hydride Battery Made with Minimum 10% Recycled materials
Nominal Dimension (with Sleeve)	:	Φ = 10.5mm H = 44.5mm
Applications	:	Recommended discharge current 85 to 2550mA
Nominal Voltage	:	1.2V
Capacity	:	Rated: 850mAh Typical: 900mAh When discharged at 170mA to 1.0V at 20℃
Charging Condition	:	85mA for 16 hrs at 20℃
Charging Retention	:	80% of rated capacity after cell storage at 20℃ for 12 months When discharged at 170mA to 1.0V at 20℃
Fast Charge	:	425mA to 850mA (0.5 to 1C) charge termination control recommended control parameters: -ΔV : 0-5mV DT/dt : 0.8℃/min (0.5 to 0.9C) 0.8 - 1℃/min (1C) TCO : 45 - 50℃ Timer : 105% nominal input (for ref. only)
Service Life	:	>500 cycles (IEC 2017 - 7.5.1.2) >200 cycles (IEC 2017 - 7.5.1.4)
Continuous Overcharge	:	85mA maximum current for 1 year. No conspicuous deformation and/or leakage
Weight	:	14.5g
Internal Resistance	:	Average 40mΩ upon fully charged (Max. 60mΩ) at 1000Hz
Max. Charging Voltage	:	1.5V at 85mA charging
Ambient Temperature Range	:	Standard Charge : 0 to 45℃ Fast Charging : 10 to 45℃ Discharge : -20 to 50℃ Storage : -20 to 35℃

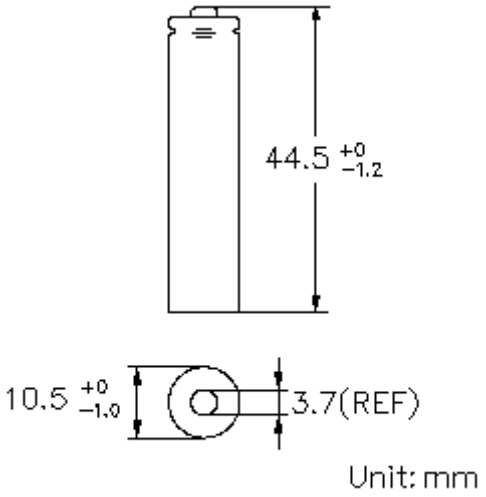

Low Rate Discharge

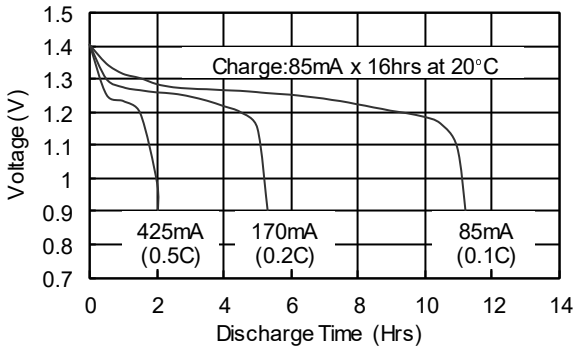

High Rate Discharge

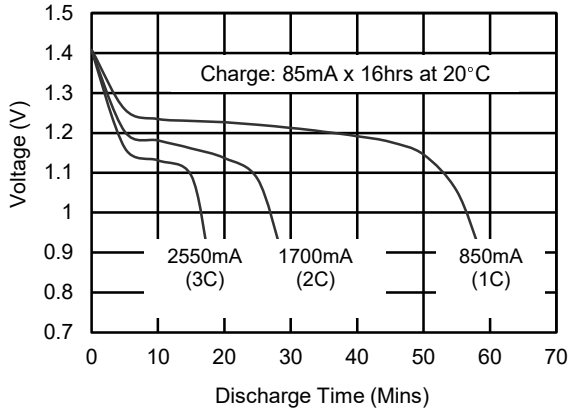

Fast Charge (Charge Control Required)

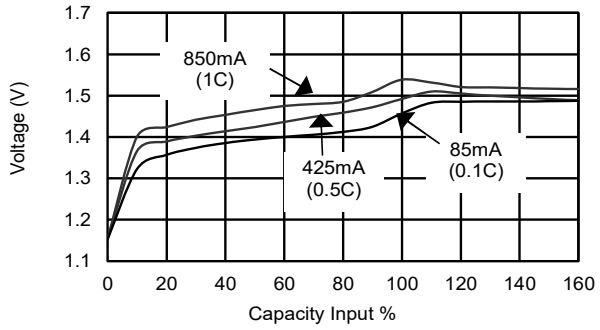

The information (subject to change without prior notice) contained in this document is for reference only and should not be used as a basis for product guarantee or warranty. For applications other than those described here, please consult your nearest GP Sales and Marketing Office or Distributors.

Manufacturer reserves the right to alter or amend the design, model and specification without prior notice.
Copyright@GPI International Ltd. – All rights reserved

Member Gold Peak Group