GP Batteries DATA SHEET

Model No.: GP300DHC

Type	:	Rechargeable Nickel Metal Hydride Cylindrical Cell
Nominal Dimension (with Sleeve)	:	Φ = 34.2mm H = 61.5mm
Applications	:	Recommended discharge current 300mA to 9A
Nominal Voltage	:	1.2V
Capacity	:	Rated capacity:3000mAh Typical capacity: 3100mAh When discharged at 600mA to 1.0V at 20℃
Charging Condition	:	300mA for 16 hrs at 20℃
Charge Retention	:	50% of nominal capacity after cell storage at 20℃ for 12months When discharged at 1.8A to 1.0V at 20℃
Fast Charge	:	1500mA to 3000mA (0.5 to 1C) charge termination control recommended control parameters: -ΔV : 0-5mV DT/dt : 0.8℃/min (0.5 to 0.9C) 0.8 - 1℃/min (1C) TCO : 45 - 50℃ Timer : 105% nominal input (for ref. only)
Service Life	:	>1000 cycles (IEC 2017 - 7.5.1.2) >300 cycles (IEC 2017 - 7.5.1.4)
Continuous Overcharge	:	300mA maximum current for 1 year. No conspicuous deformation and/or Leakage
Weight	:	70.0g
Internal Resistance	:	Average 40mΩ upon fully charged (Max 45mΩ) at 1000Hz
Max. Charging Voltage	:	1.5V at 300mA charging
Ambient Temperature Range	:	Standard Charge : 0 to 40℃ Fast Charging : 10 to 40℃ Discharge : -20 to 50℃ Storage : -20 to 35℃ Storage (1week) : -20 to 60℃

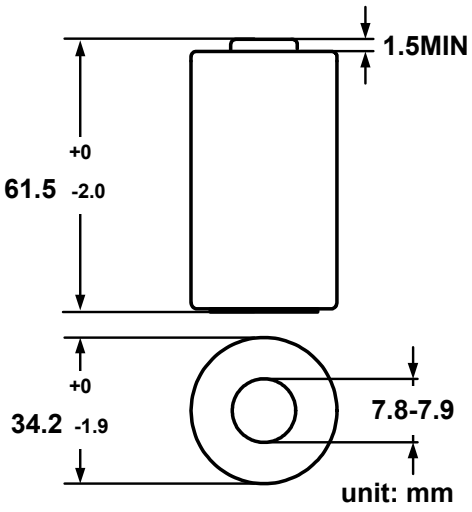

Low Rate Discharge

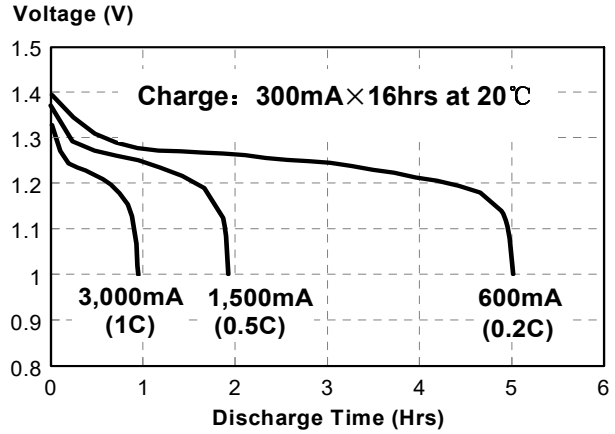

Fast Charge (Charge Control required)

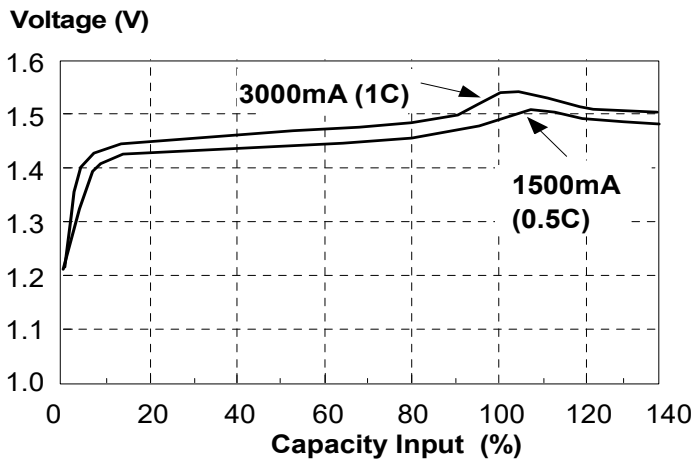

High Rate Discharge

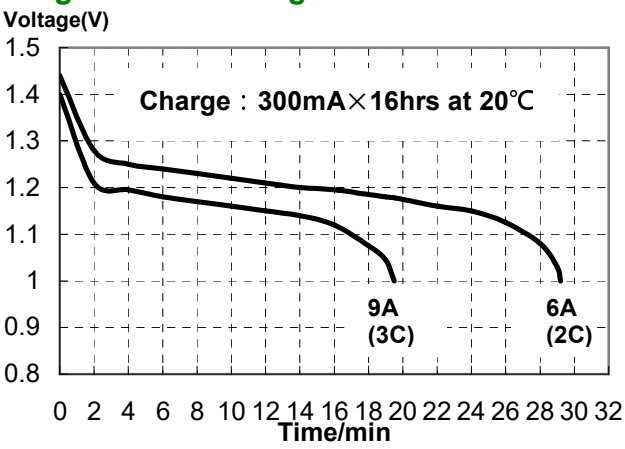

The information (subject to change without prior notice) contained in this document is for reference only and should not be used as a basis for product guarantee or warranty. For applications other than those described here, please consult your nearest GP Sales and Marketing Office or Distributors.

Manufacturer reserves the right to alter or amend the design, model and specification without prior notice.
Copyright@GPI International Ltd. – All rights reserved
Member Gold Peak Group