GP ENERGY TECH

DATA SHEET

Model No.: GP65AAAHC

Type	Rechargeable Nickel Metal Hydride Cylindrical Cell
Nominal Dimension (with Sleeve)	Diameter = 10.5mm Height = 44.5mm
Applications	Recommended discharge current 65 to 1950mA
Nominal Voltage	1.2V
Capacity	Rated: 650mAh Typical: 730mAh When discharged at 130mA to1.0V at 20℃
Charging Condition	65mA for 16 hrs at 20℃
Charge Retention	80% of rated capacity after cell storage at 20℃ for 12 months When discharged at 130mA to 1.0V at 20℃
Fast Charge	325mA to 650mA (0.5 to 1C) charge termination control recommended control parameters: -ΔV : 0-5mV DT/dt : 0.8℃/min (0.5 to 0.9C) 0.8 - 1℃/min (1C) TCO : 45 - 50℃ Timer : 105% nominal input (for ref. only)
Service Life	>500 cycles (IEC61951-2(2017) 7.5.1.2)
Continuous Overcharge	65mA maximum current for 1 year. No conspicuous deformation and/or leakage
Weight	13.0g
Internal Resistance	Average 40mΩ upon fully charged (Max. 60mΩ)at 1000Hz
Max. Charge Voltage	1.5V at 65mA charging
Ambient Temperature Range	Standard Charge: 0 to 45℃ Fast Charge:10 to 45℃ Discharge: -20 to 50℃ Storage: -20 to 35℃ Storage(1week): -20 to 60℃

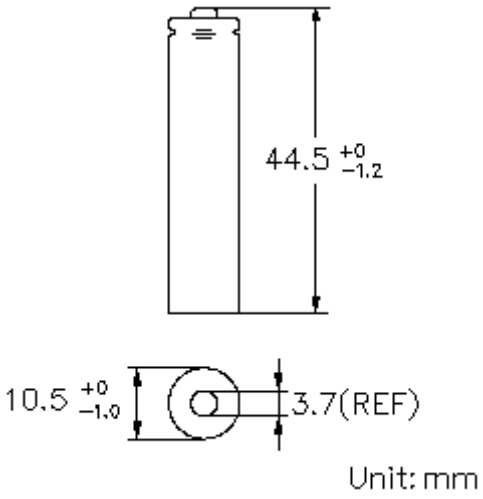

Low Rate Discharge

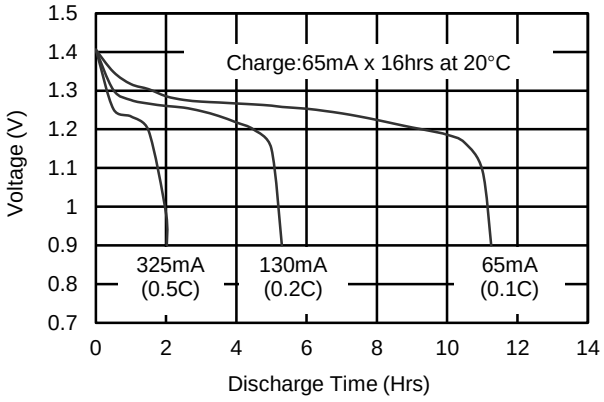

High Rate Discharge

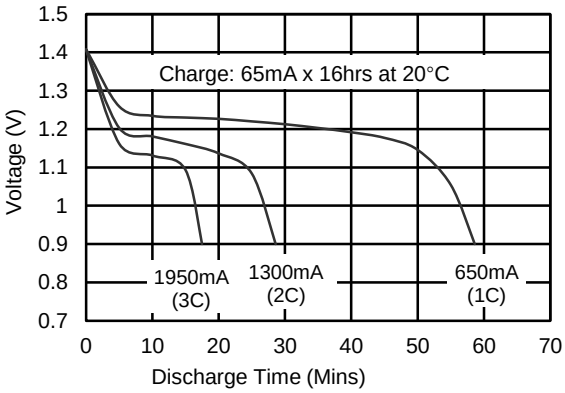

Fast Charge (Charge Control Required)

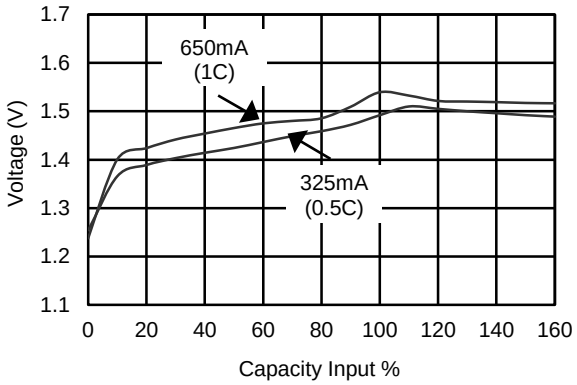

The above information is generally descriptive only and is not intended as guarantee or warranty. Cell and battery specifications are subject to change without notice. All descriptions or warranties are contained solely in specification sheets accompanying outside those described in this document.

TRS0708 rev.07

Manufacturer reserves the right to alter or amend the design, model and specification without prior notice.
Copyright@ GP Energy Tech International Pte. Limited – All rights reserved

Member Gold Peak Technology Group