WATERPROOF JUNCTION BOX

JB01

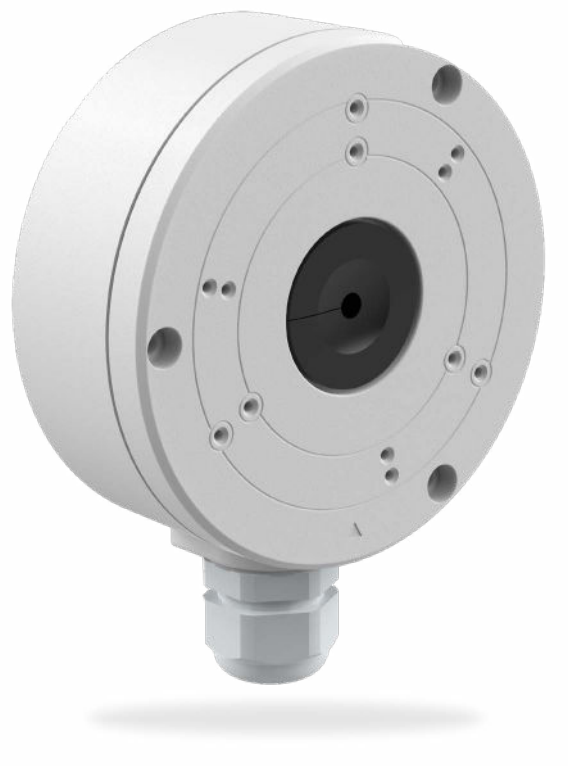

Improve your setup with our waterproof junction box, designed for STRONG BULLET-DL4AP-5MP-UK and TURRET-45D-5MP-UK cameras.

Enhance your security setup with the JB01 Waterproof Junction Box!

With the JB01, fortify your surveillance system against both physical tampering and environmental challenges. Our waterproof junction box not only protects against vandalism with its robust construction but also ensures uninterrupted operation in any weather conditions, thanks to its IP66 waterproof rating.

By incorporating the JB01 into your security setup, you significantly improve the resilience and reliability of your surveillance infrastructure. Ensure continuous monitoring and peace of mind with the JB01 Waterproof Junction Box.

Compatibility



- Engineered for seamless integration with both **TURRET-45D-5MP-UK and BULLET-DL4AP-5MP-UK**, the JB01 Waterproof Junction Box simplifies installation of your STRONG camera.
- Designed for **easy installation.**

Waterproof



- **IP 66:** Solidly built tough with **IP66 rating**, ensuring reliable protection against dust and water, keeping your surveillance equipment safe in any environment.
- Reliable **waterproofing** ensures your equipment stays operational, come rain or shine, for uninterrupted surveillance peace of mind.

Reliable & Secure



- **Against vandalism:** The JB01 provides an additional layer of defense for your cameras, guaranteeing uninterrupted monitoring.
- **Safeguard camera connections:** With the JB01, ensure the protection and integrity of your surveillance system's connections, enhancing overall security.

WATERPROOF JUNCTION BOX

JB01

General specifications

Product Material:	Aluminium Alloy
Net weight:	0.55 lb (0,25 kg)
Gross weight:	0.71 lb (0,32 kg)

Technical specifications

Model:	JB01
Certification:	RoHS
Compatible with:	TURRET-45D-5MP-UK BULLET-DL4AP-5MP-UK

Package Contents

1x Waterproof Junction box
1x Cable gland
1x Positionning sticker
1x Quick Guide
1x Warranty and safety instructions
2x Set of 4 Screws
1x Set of 4 Rawl plugs

Environment

Ambient temperature:	-30 °C ~ +60 °C
Humidity:	<90% (RH)

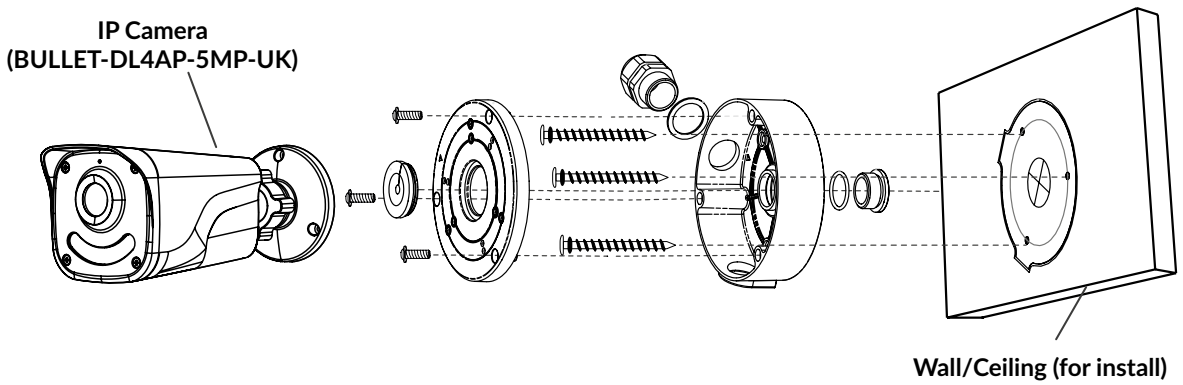

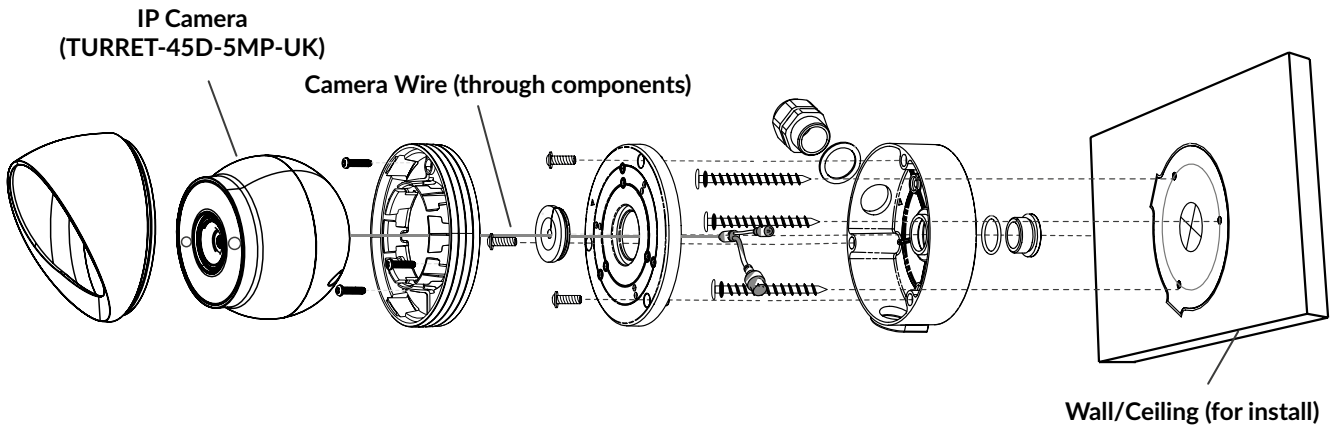

11 Apr 2024 14:49

JB01 EAN: 9120072378119
PCB: 10

STRONG shall not be responsible in any manner relating to the logos, brands and/or trademarks displayed herein which are not registered by STRONG. Specifications and pictures are subject to change without notice. Data throughput, distance, signal range, and coverage area per sq.ft are used only for reference and based on performance test results under normal use case conditions. Actual performances are not guaranteed and may vary due to differences in operating environments, distance and positioning of the products, mix of products used, building materials, wireless and electrical interferences and other adverse conditions. Intended for indoor/outdoor use only in the UK, EU member states and EFTA states.
© STRONG 2024. All rights reserved.