NTT AT

MPO,MTP™ Connector Cleaner

NEOCLEAN-M series

MPO, MPO-16 connectors, with expanding numbers of fiber core can be easily cleaned with just a push!!

NEOCLEAN-M



With the large capacity of optical communication needed for expanding applications, especially in data centers, the number of fiber core mounted in MPO connectors is also expanding.

MPO connectors of 1 row with 12 core and 2 rows with 24 core are common, and the MPO-16 expanded to 1 row with 16 care has been introduced, and so the importance of cleaning is also increasing.

The NEOCLEAN-M for 12-core systems and the NEOCLEAN-M2 for 16-core systems respond to the need for endface cleaning.

POINT 1 — Simple to Operate

Just insert into the optical port and pushing presses the cleaning cloth against the connector's end face and moves it the predetrmined amount and cleaning is complete.
Plugs can be cleaned by installing the attachment.

POINT 2 — High Cleaning Performance

The specialized microfiber cleaning cloth removes even the smallest dirt. Since it is a dry cleaning, there is no wiping strip residue, a problem in solvent cleaning.
It provides over 600 cleaning times.

POINT 3 — Compatible with MPO and MPO-16

The M and M2 have optimized structures for perfectly cleaning the 12 and 16 optical fibers of MPO and MPO-16 connectors without interfering with the guide pins.
The configurations match the MPO and MPO-16 keys to prevent erroneous insertion.

Cleaning Performance

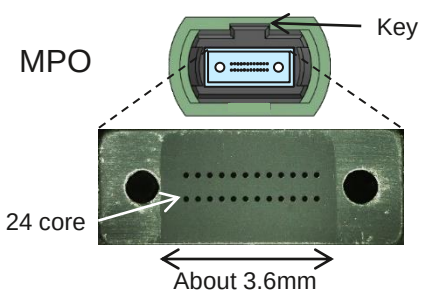

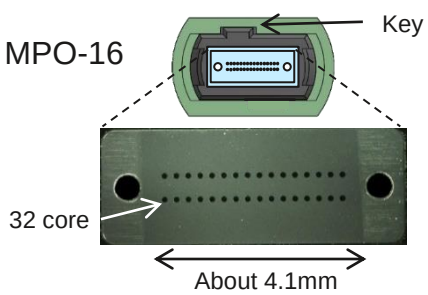

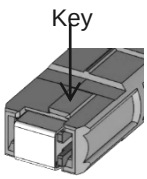

M2 Cleaning Head

IT Infrastructure Support

https://keytech.ntt-at.co.jp/en/optic1/prd_0051.html

Product Specification

Product	NEOCLEAN-M	NEOCLEAN-M2
Type	ATC-NE-M1	ATC-NE-M2
Compatible Connectors	MPO, MTP™ core : ～8, 12, 12×2 etc. 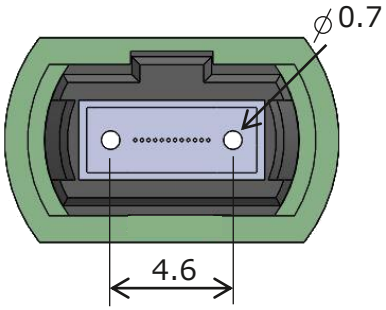	MPO-16, MTP™-16 core : 16, 16×2 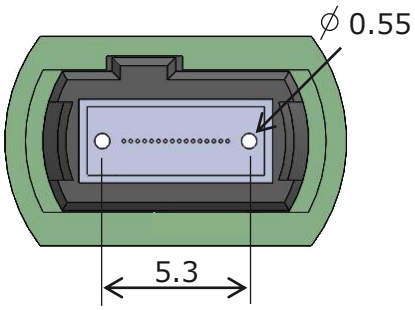
Compatible End Face	PC, APC (with pin、no pin)	PC, APC (with pin、no pin)
Usages	over 600 times	over 600 times
Size(mm)	L197 x W15 x H51 (without attachment) L208 x W17 x H51 (with attachment)	L197 x W15 x H51 (without attachment) L204 x W15 x H51 (with attachment)

Cleaning operation





"MTP" is a registered trademark of US Conec Ltd. Other company names, product names, etc. recorded herein are trademarks or registered trademarks of each respective company.

The company names and product names in this document are trademarks or registered trademarks of each companies.
Please understand that the contents recorded herein may be subject to change without notification.

＊Catalog contents from August, 2024 to present.

For more information https://keytech.ntt-at.co.jp/en/optic1/prd_0051.html

NTT Advanced Technology Corporation

Optical Business Division,
Material and Nanotechnology Business Headquarters
NTT Musashino R&D Center 1-4F, 3-9-11 Midori-cho, Musashino-shi,
Tokyo 180-0012, Japan