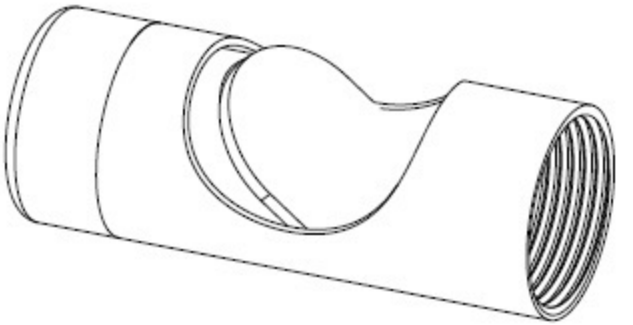

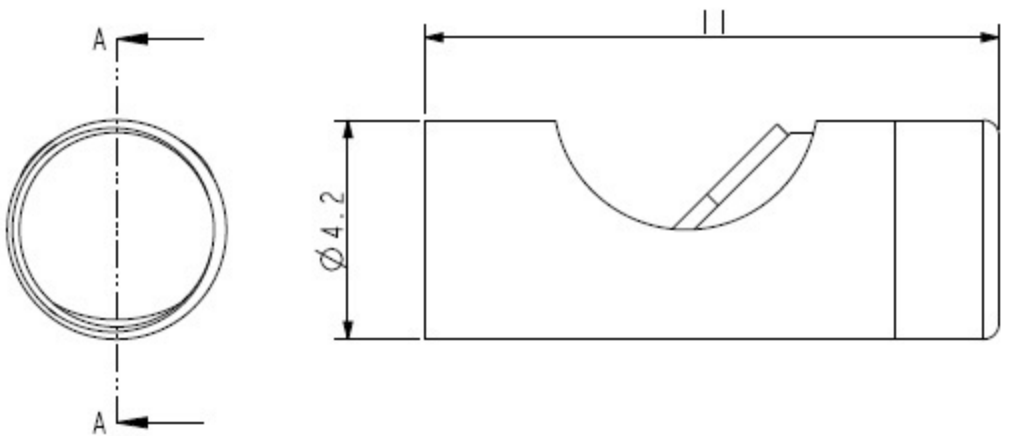
A
A
11
Ø4.2

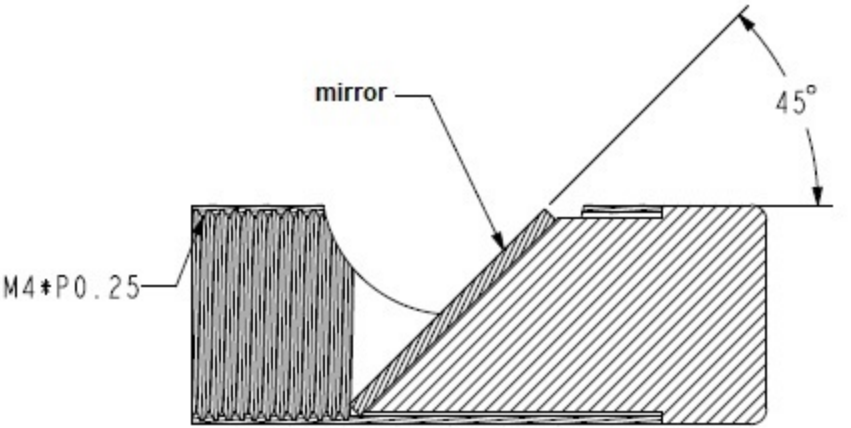
mirror
45°
M4*P0.25