Brilliant
THE JEWEL IN LIGHTING

Todd WA
47682...
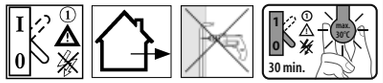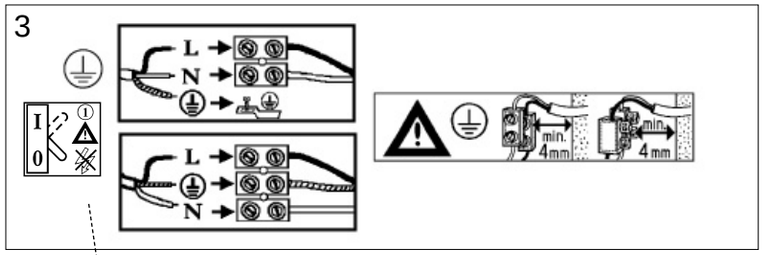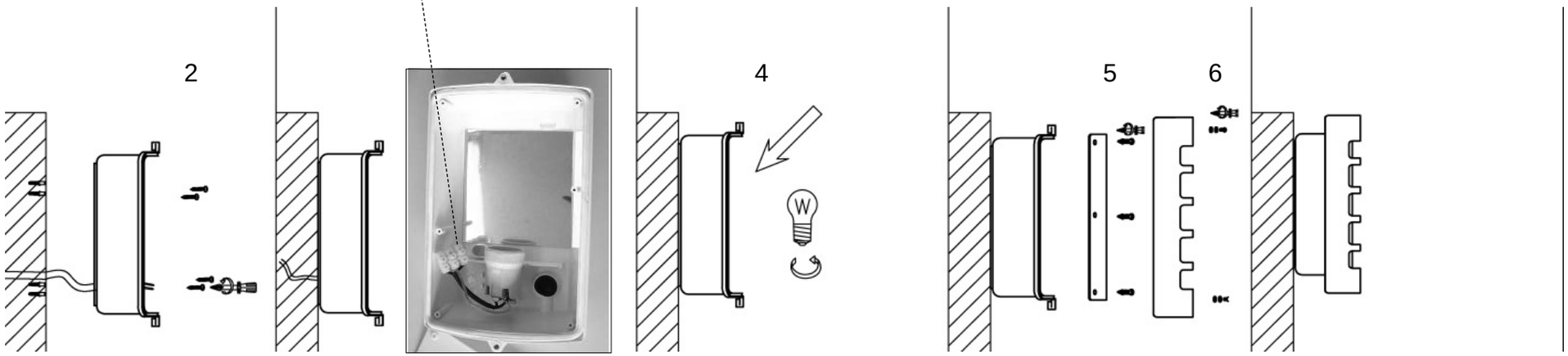
06.10