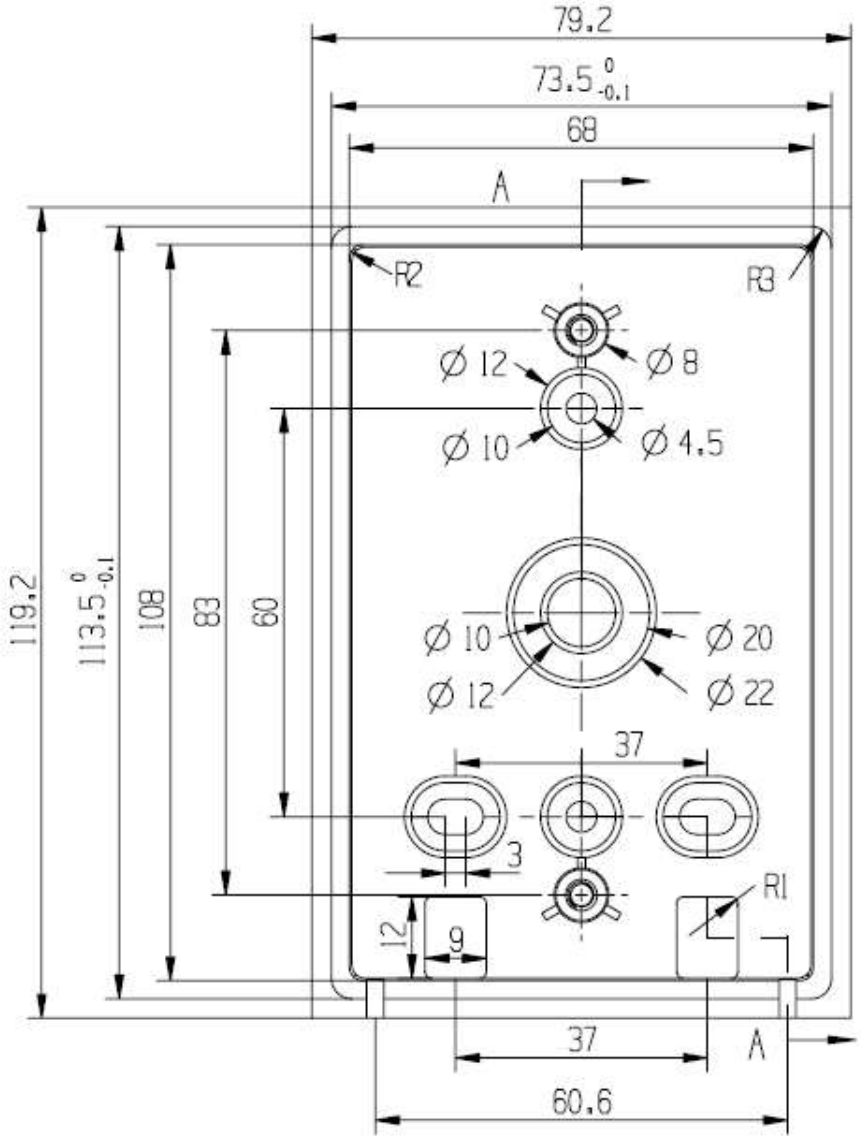
79.2
73.5 0 -0.1
68
A
R2
R3
Ø 12
Ø 8
Ø 10
Ø 4.5
119.2
113.5 0 -0.1
108
83
60
Ø 10
Ø 20
Ø 12
Ø 22
37
3
R1
12
9
37
A
60.6