Item no.: 1570245

Data Sheet

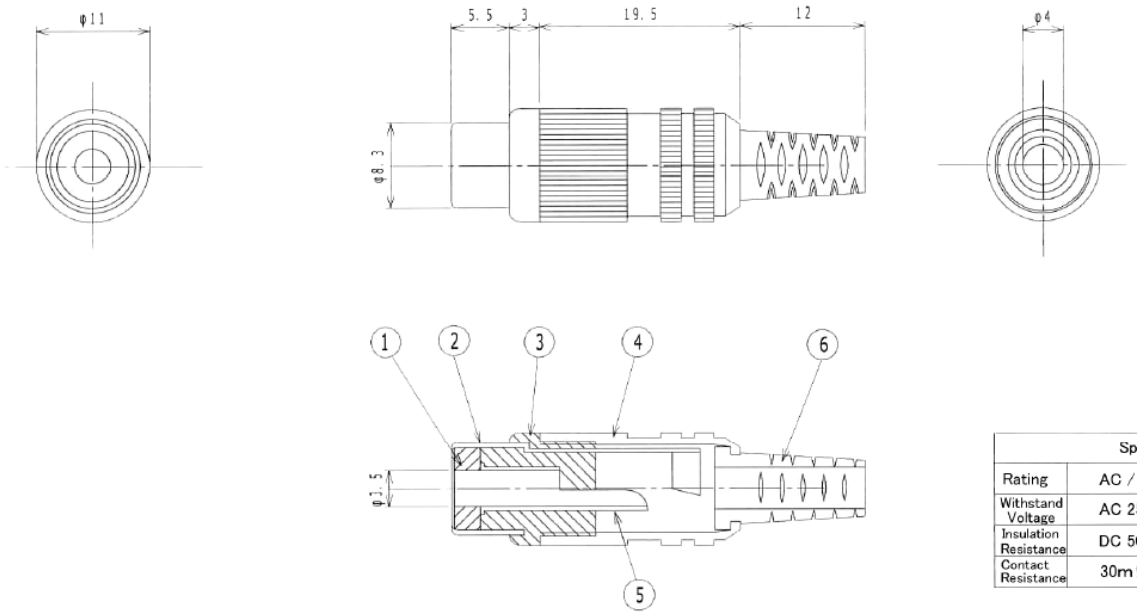

Specifications	
Rating	AC / DC 34V 2A
Withstand Voltage	AC 250V (a minute)
Insulation Resistance	DC 500V 100mΩ (Min.)
Contact Resistance	30mΩ (Max.)

LET	PART NAME	MATERIAL	QTY	FINISH	NOTE
6	Cord Bushing.	PVC	1		
5	Contact	Brass	1	Ni	
4	Cap	Brass	1	Ni	
3	Body	ABS Resin	1		
2	Case	Steel	1	Ni	
1	Insulation Washer	ABS Resin	1		

TOLERANCE	SCALE	DATE	DESING	DRAW	INSPE	APRO
±0.3				N. I		

MODEL		QTY	PART NAME	MR567MS	
MATERIAL			DRAW. NO	MR567MS	
FINISH					