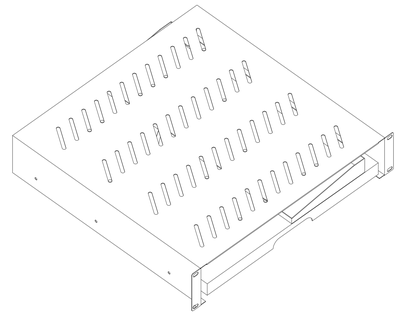

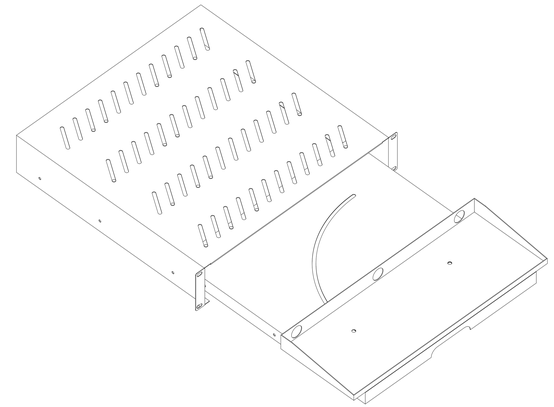

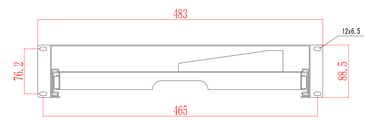

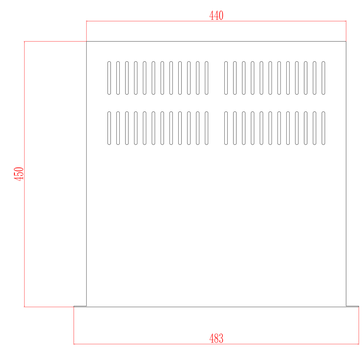

Material thickness:1.5mm
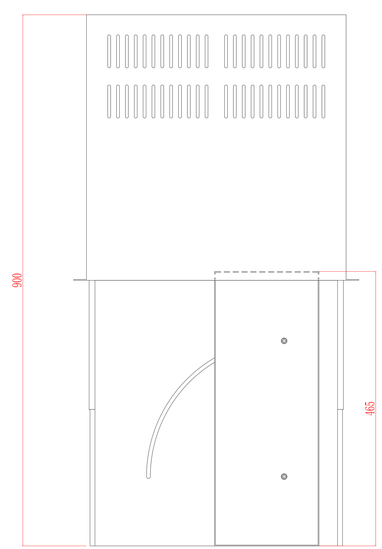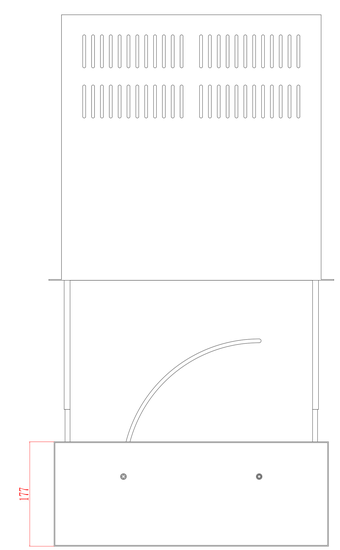
DO NOT SCALE
UNIT:mm
DATE:07-04-2021