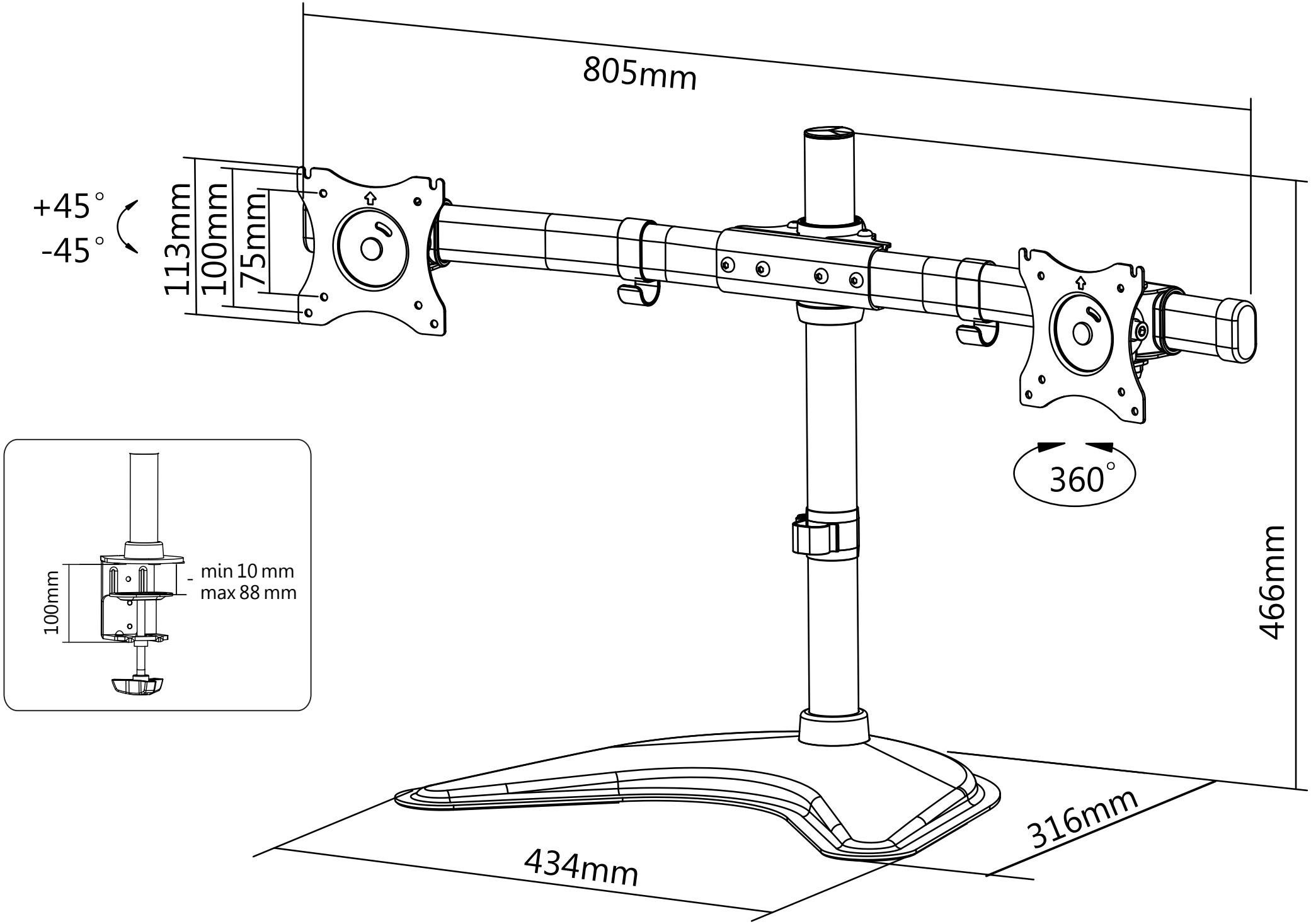
805mm
+45°
-45°
113mm
100mm
75mm
360°
466mm
min 10 mm
max 88 mm
100mm
316mm
434mm