Paulmann

IP44

Info

www.paulmann.com

Paulmann Licht GmbH
Quezinger Feld 2
31832 Springe
Germany

www.paulmann.com
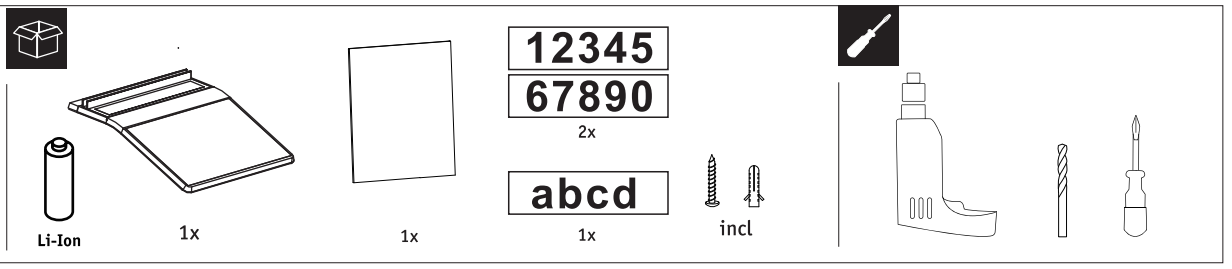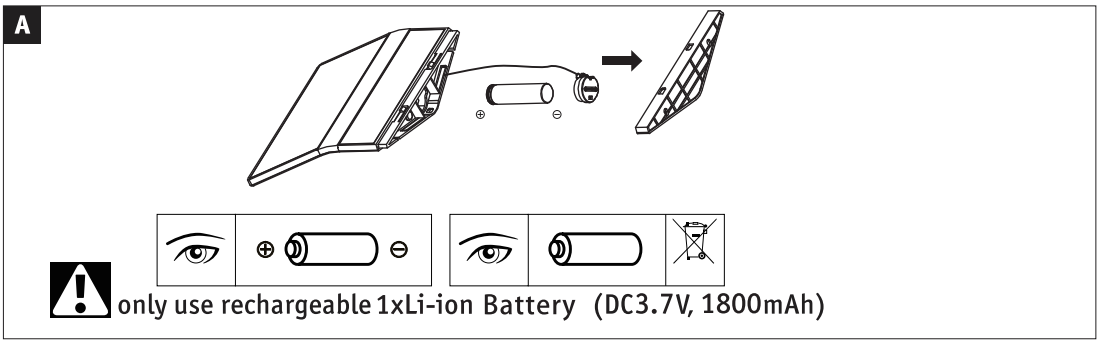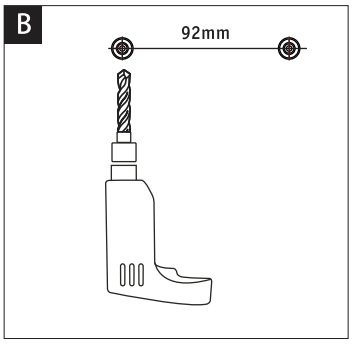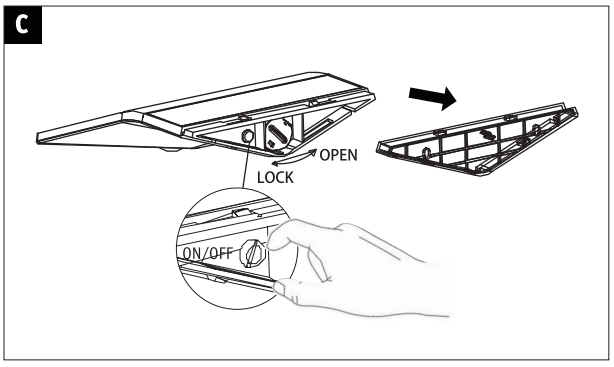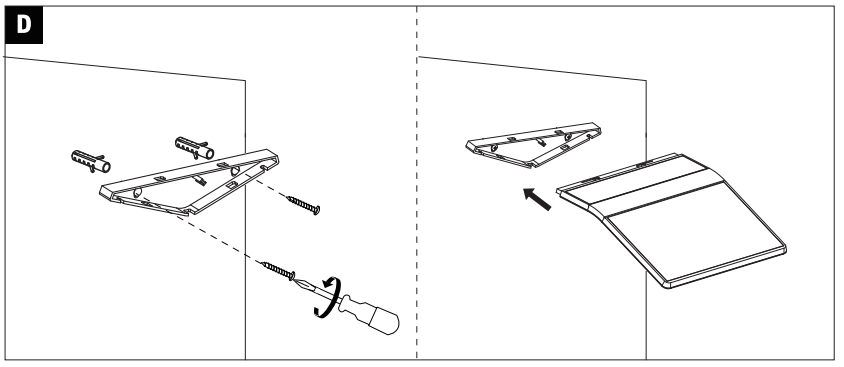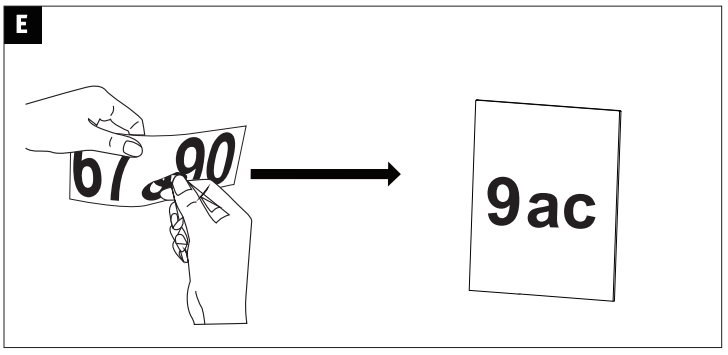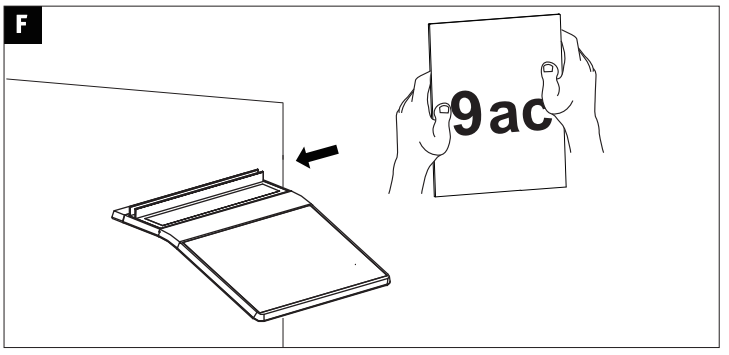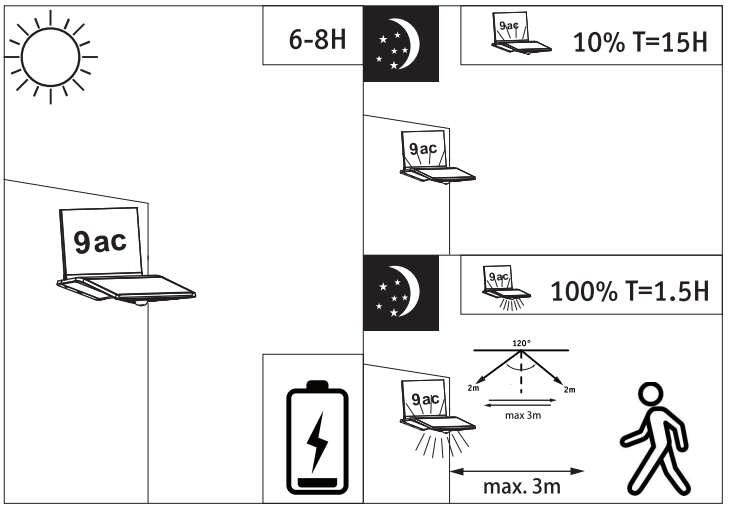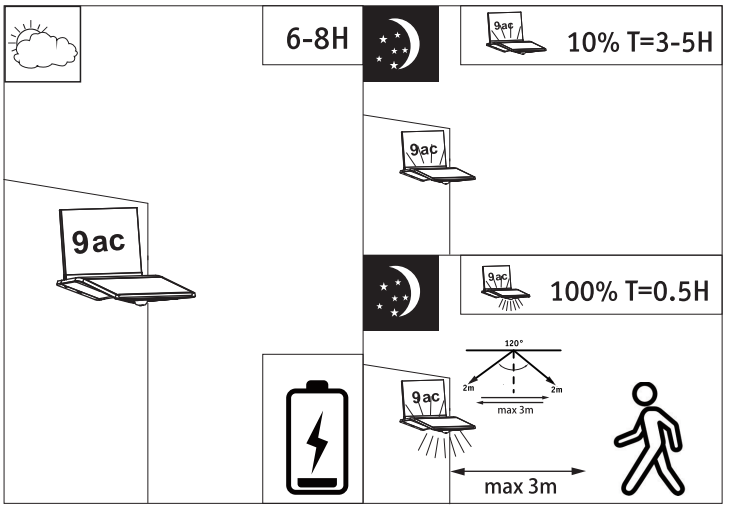
Art.-Nr.: **94243**
PJY 03/22