INSTRUCTION MANUAL
MONTAGEANLEITUNG
Radio control model / R/C Flugmodel

PC-6
PILATUS PORTER

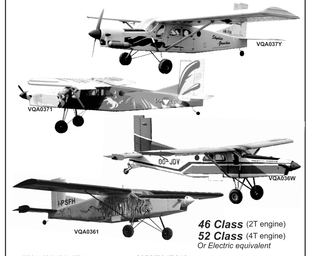

46 Class (2T engine)
52 Class (4T engine)
Or Electric equivalent

TECHNISCHE DATEN

Spannweite	1580mm
Länge	1160mm
Elektroantrieb	870 Watt (PULSAR 60)
Verbrennerantrieb	7.5cc 2-T / 11cc 4-T
Fernsteuerung	5 Kanal / 5 Servos

SPECIFICATIONS

Wingspan	1580mm
Length	1160mm
Electric Motor	870 Watt (PULSAR 60)
Glow Engine	46 [2-T] / 70 [4-T]
Radio	5 Channel / 5 Servos

WARNING! This radio controlled model is NOT a toy, if modified or flown carelessly it could go out of control and cause serious human injury or property damage. Before flying your airplane, ensure the air field is spacious enough. Always fly it outdoors in safe areas and seek professional advice if you are unexperienced.

ACHTUNG! Dieses ferngesteuerte Modell ist KEIN Spielzeug! Es ist für fortgeschrittene Modellflugpiloten bestimmt, die ausreichende Erfahrung im Umgang mit derartigen Modellen besitzen Bei unsachgemäßer Verwendung kann hoher Personen- und/oder Sachschaden entstehen. Fragen Sie in einem Modellbauverein in Ihrer Nähe um professionelle Unterstützung, wenn Sie Hilfe im Bau und Betrieb benötigen. Der Zusammenbau dieses Modells ist durch die vielen Abbildungen selbsterklärend und ist für fortgeschrittene, erfahrene Modellbauer bestimmt.

REQUIRED FOR OPERATION (Purchase separately)
BENÖTIGTE KOMPONENTEN (Nicht im Lieferumfang enthalten)

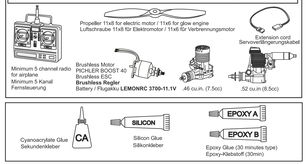

Tool Required/ Erforderliches Werkzeug

The pre-covered film on ARF kit may wrinkle due to variations of temperature.
Store model in a cool and dry place for ewile.
Then, staring with low heat, you may carefully use a hair dryer to smooth out wrinkels.

Die Bespannung des Modells kann durch Temeraturentrölisse erschlaffen oder Falten werfen z.b bei zu starker Sonnenenstrahlung oder Hitze.
Stellen Sie das Modell zunächst an einen kühlen Platz für eine bestimmte Zeit. Danach können Sie versuchen die restlichen Falten vorsichtig mit einem Haartrockner zu behandeln.

!

Drill holes using the stated size of drill (In this case 1.5 mm Ø)	Take particular care here	Hatched-in areas remove covering film carefully	Check during assembly that these parts move freely, without binding	Use epoxy glue	Apply cyano glue
Assemble left and right sides the same way	Not included. These parts must be purchased separately	Löcher bohren mit dem angegebenen Bohrer (hier 1.5 mm)	Hier besonders aufpassen	Schraffierte Bereiche bespannfolie vorsichtig entfernen	Überprüfen, dass bewegliche Teile nicht reibungslos bewegen lassen
Epoxy-Klebstoff verwenden	Sekundenkleber auftragen	Linke und rechte Seite wird gleichermaßen zusammengebaut	Kann entfallen, falls muoen separat gekauft werden.		

CONVERSION TABLE

1.0mm = 3/64"	3.0mm = 1/8"	10mm = 13/32"	25mm = 1"
1.5mm = 1/16"	4.0mm = 5/32"	12mm = 15/32"	30mm = 1-3/16"
2.0mm = 5/64"	5.0mm = 13/64"	15mm = 19/32"	45mm = 1-25/64"
2.5mm = 3/32"	6.0mm = 15/64"	20mm = 51/64"	

1

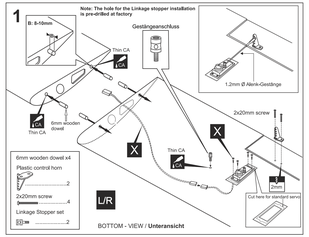

2

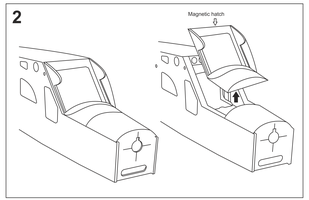

3

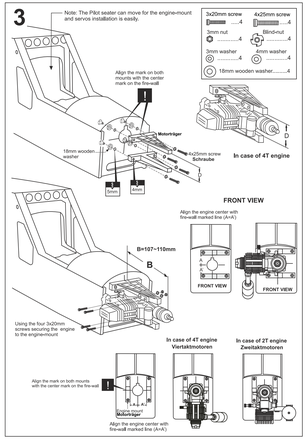

4

- Using a plywood motor mounting plate as a template, mark the fire-wall where the four holes are to be drilled (1).
- Remove the plywood motor mounting plate and drill a 13/64"(5mm) hole through the firewall at each of the four marks marked (2).
- Using a aluminum motor mounting plate as a template, mark the plywood motor mounting plate where the four holes are to be drilled (3).
- Mount the aluminum motor mounting plate and drill a 1/8"(3mm) hole through the plywood motor mounting plate at the four marks marked (4).

Sperrholzplatten als Schablonen verwenden, um Vorsorgt ausrichten und Löcher bohren. Motor nach untenstehendem Schema einbauen. Für optimale Leistung empfehlen wir folgende Komponenten:
-Brushless-Motor PICHLER BOOST 40
-Brushless Regler PICHLER ESC-60
-LiPO Akku LEMONRC 3700-11.1V
-Luftschraube 11x8

For maximum performance, we recommended the following:
-Brushless-Motor PICHLER BOOST 40
-Brushless Regler PICHLER ESC-60
-LiPO Battery LEMONRC 3700-11.1V
-Luftschraube 11x8

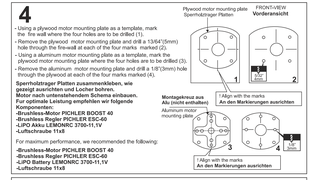

5

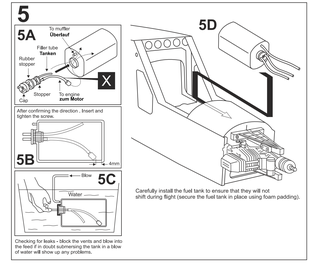

6

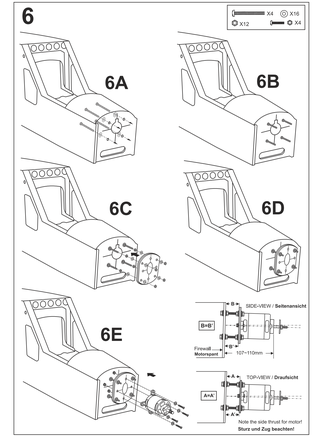

7

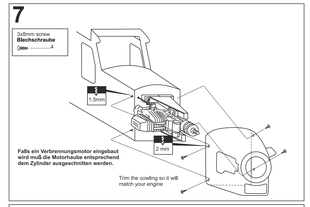

8

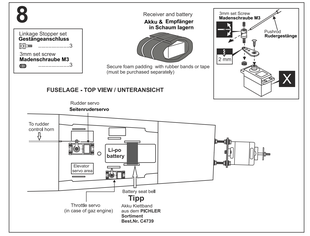

9

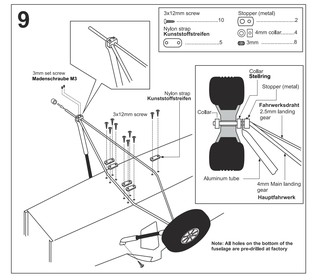

10

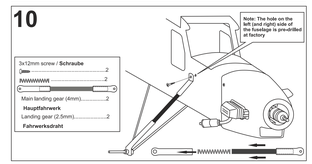

11

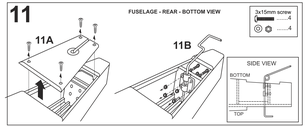

12

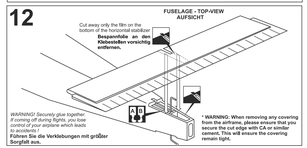

13

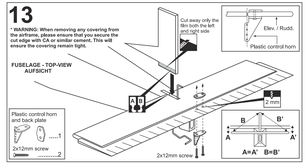

14

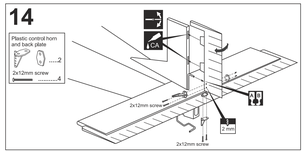

15

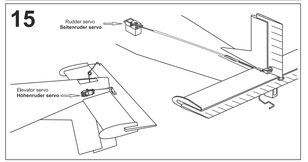

16

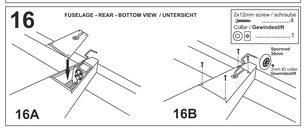

17

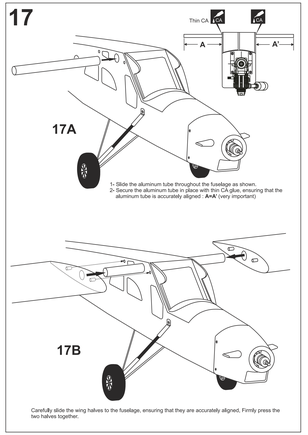

18

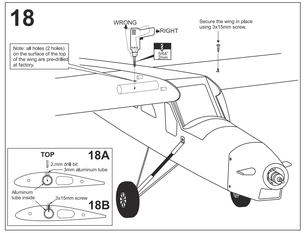

19

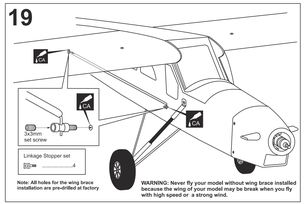

20

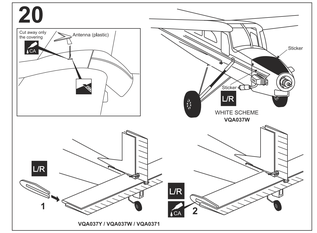

21

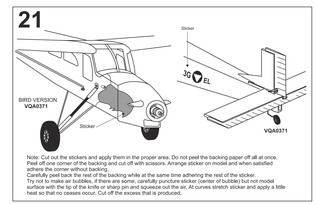

22

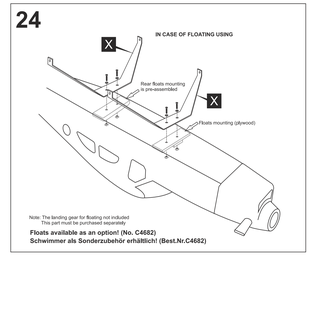

23

24

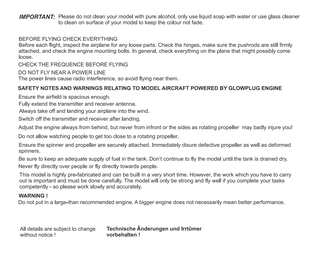

IMPORTANT: Please do not clean your model with pure alcohol, only use liquid soap with water or use glass cleaner to clean on surface of your model to keep the colour not fade.

BEFORE FLYING CHECK EVERYTHING
Before each flight, inspect the airplane for any loose parts. Check the hinges, make sure the pushrods are still firmly attached, and check the engine mounting bolts. In general, check everything on the plane that might possibly come loose.

CHECK THE FREQUENCE BEFORE FLYING

DO NOT FLY NEAR A POWER LINE
The power lines cause radio interference, so avoid flying near them.

SAFETY NOTES AND WARNINGS RELATING TO MODEL AIRCRAFT POWERED BY GLOWPLUG ENGINE

Ensure the airfield is spacious enough.
Fully extend the transmitter and receiver antenna.
Always take off and landing your airplane into the wind.
Switch off the transmitter and receiver after landing.
Adjust the engine always from behind, but never from infront or the sides as rotating propeller may badly injure you!

Do not allow watching people to get too close to a rotating propeller.

Ensure the spinner and propeller are securely attached. Immediately disure defective propeller as well as deformed spinners.

Be sure to keep an adequate supply of fuel in the tank. Don't continue to fly the model until the tank is drained dry.
Never fly directly over people or fly directly towards people.

This model is highly pre-fabricated and can be built in a very short time. However, the work which you have to carry out is important and must be done carefully. The model will only be strong and fly well if you complete your tasks competently - so please work slowly and accurately.

WARNING !
Do not put in a large-than recommended engine. A bigger engine does not necessarily mean better performance.

All details are subject to change without notice !

Technische Änderungen und Irrtümer vorbehalten !