Data Sheet

REV.1

5.5 x 2.1mm DC 12 V 0.5A plug (long type)

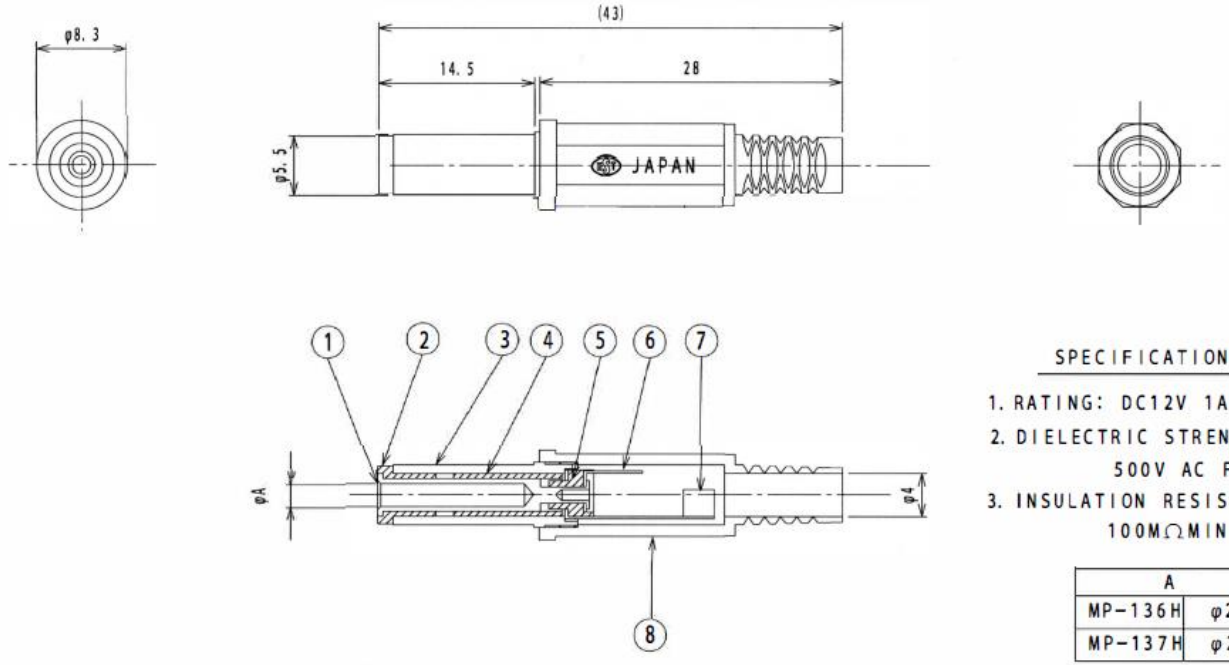

SPECIFICATION

1. RATING: DC12V 1A
2. DIELECTRIC STRENGTH:
   500V AC FOR 1MINUTE.
3. INSULATION RESISTANCE:
   100MΩMIN AT 500V DC.

A	
MP-136H	φ2. 1
MP-137H	φ2. 5

LET	PART NAME	MATERIAL	QTY	FINISH	NOTE
8	HANDLE	P. E	1		
7	TERMINAL B	BRASS	1	Ni	
6	TERMINAL A	BRASS	1	Ni	
5	INSULATOR C	P. C	1		
4	INSULATOR B	P. V. C	1		
3	SLEEVE	BRASS	1	Ni	
2	INSULATOR A	A. B. S	1		
1	CENTER PIN	BRASS	1	Ni	

TOLERANCE	SCALE	DATE	DESING	DRAW	INSPE	APRO
±0. 3	2/1	94/5/19		N. I		

MODEL 型式		QTY	PART NAME 品名	No. MP-136H / MP-137H
MATERIAL 材質	2366435	DRAW. NO 図番	MP136H
FINISH 処理			