Data Sheet

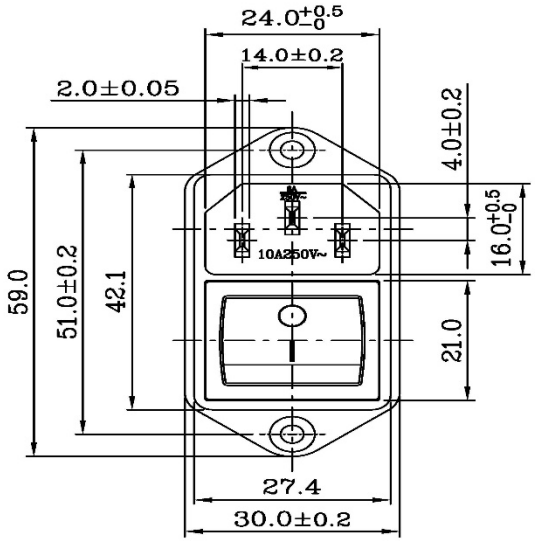

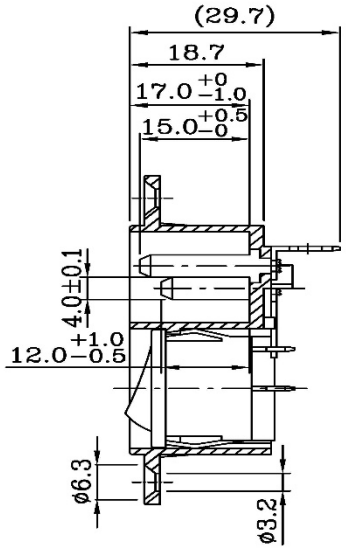

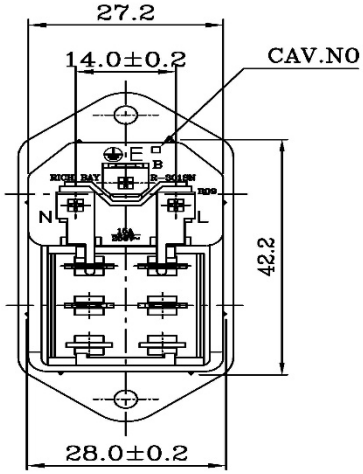

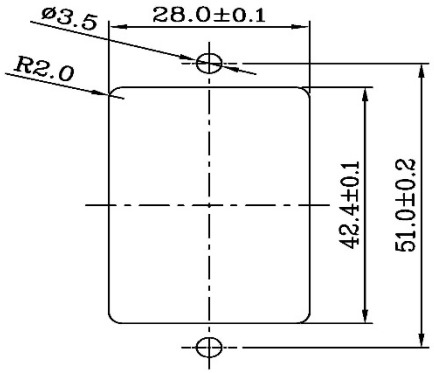

PANEL CUT−OUT

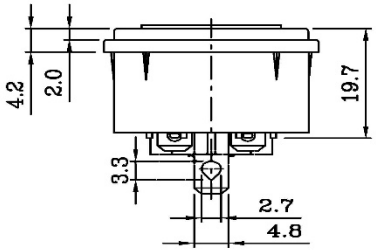

SPECIFICATION:
1. INSULATION RESISTANCE: OVER 100MΩ 500V DC.
2. DIELECTRIC STRENGTH: 2000V AC ONE MINUTE.
3. Body Material: Black Glass−Fiber Thermoplastic . UL 94V−2~0

Rating:AC 15A 250V	
Mark	Safety Regulation
cRUus	cULus
Rating:AC 10A 250V	
Mark	Safety Regulation
	VDE
	CCC
	ENEC

SPECIFICATION (SWITCH) :
1.CIRCUIT : DPST ON−OFF.
2.CONTACT RESISTANCE : 30MΩ Max.
3.INSULATION RESISTANCE : DC 500V 100MΩ Min.
4.WITHSTAND VOLTAGE : AC 1000V 1 Minute.
5.OPERATION FORCE : 800±300g.
6.ELECTRICAL LIFE : 10,000 Cycles At Full Load.
7.OPERATING TEMPERATURE RANGE : −25°C ~ +85°C.
8.SOLDERING : 280°C FOR 3 Sec.
9.DIELETRIC STRENGH: 2000V AC 1 Minute.
10.BOBY MATERIAL : Black Glass−Fiber Thermoplastic. UL 94V−2~0.

备注：I/O为 6A 250V

IMPORTANT THIS DRAWING FOR REFERENCE ONLY 注意：此圖只供參考用

	UNIT	UNIT Q'TY	SCALE	TOLERANCE		PRODUCT NO.	R−301SN(B09)	REV
	mm	1	1 : 1		X.XX±0.1 XX.XX±0.2 XXX.XX±0.3			
DRAWN BY 李 2015.07.08 小英		APPROVED BY 羅 2015.07.08 士凱		ID NO	15070809Q	INTERIM NO.		F
				DESCRIPTION		NEW NO.		