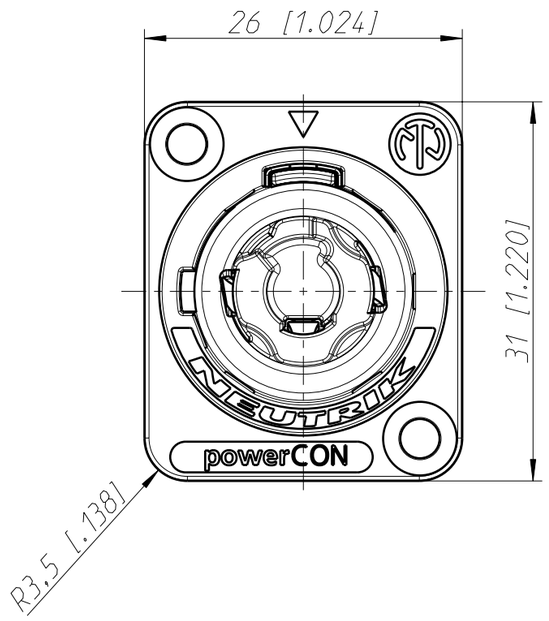

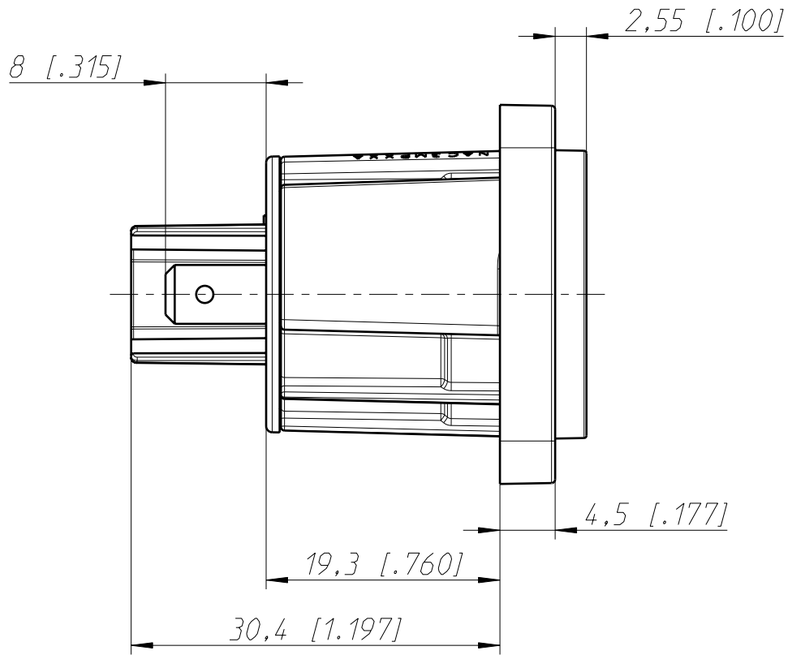

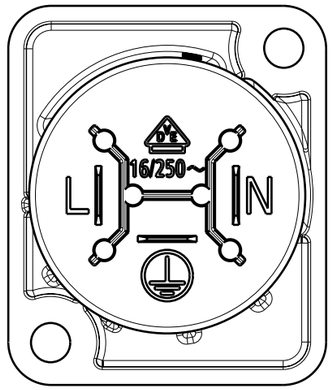

Frontplattenausschnitt Rückseite
panel cutout rearside

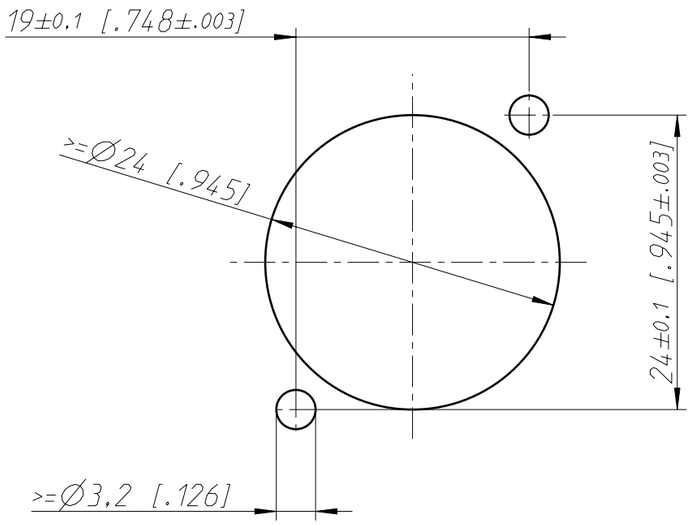

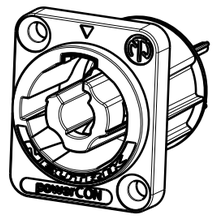

1:1

General tolerances ISO 2768-m	Scale		Date	Name
Refer to protection notice ISO 16016.	2:1 (A3)	Drawn	24.10.19	Hofmann
Name		Modified	-	-
–		Change-No.	Sheet-No.	Index
NAC3MPXXA		-	1 / 1	–
		Replacement for:		
NEUTRIK		Drawing-No. ST-NAC3MPXXA		