

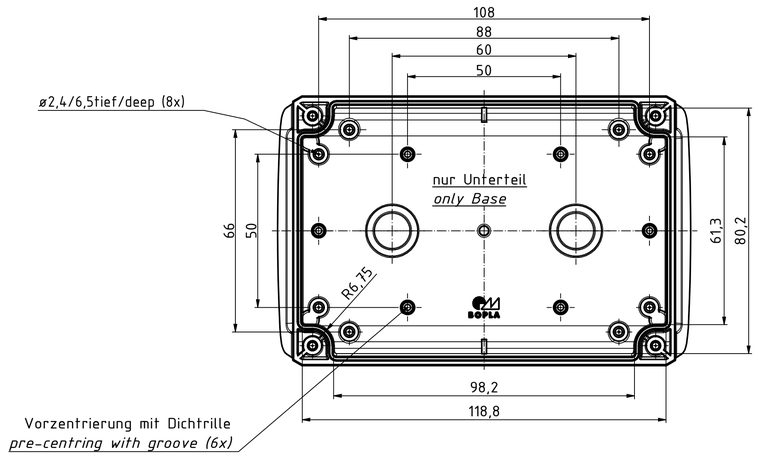

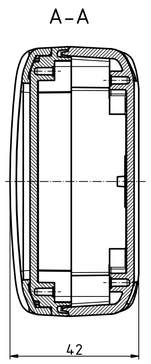

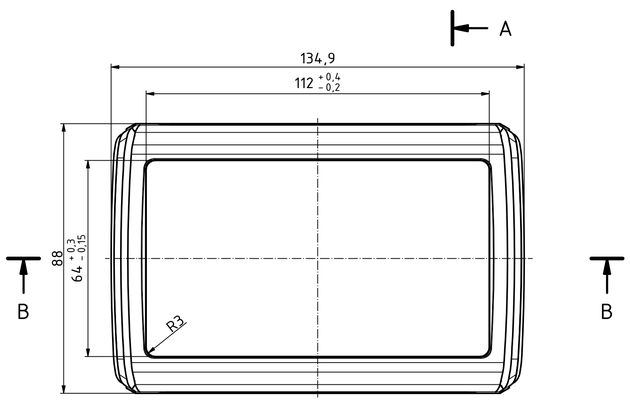

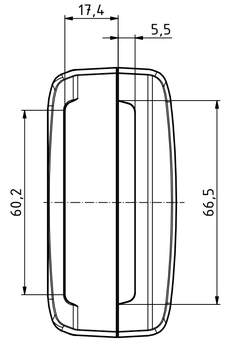

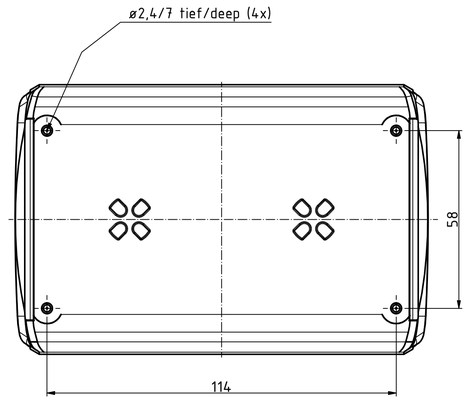

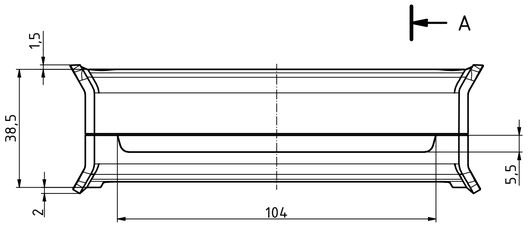

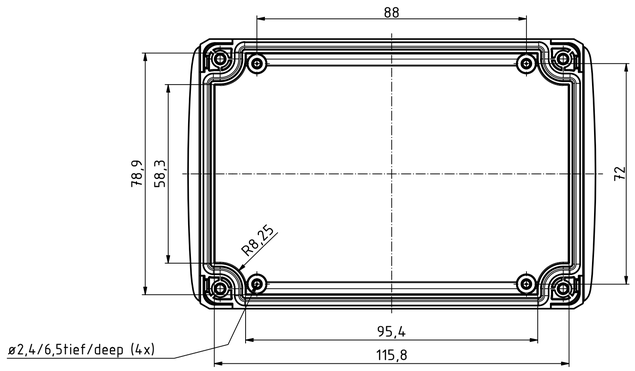

ISO (1 : 2)

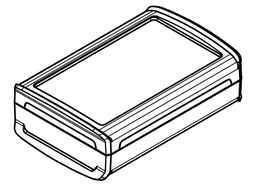

Maßstab/ *Scale:*	1:1 (1:2)
Zeichnungs-Nr. / *Drawing-No.:*	
Artikel / *Article:*	BOV 120903 SET UT / OT / FO Katalogzg./Catalogue draw.
A.Nr./ *Alt.No:*	
Datum/ *Date:*	
DISK:	BoVersa BOV-FO 120903- SET.idw
Datum/*Date:*	29.05.2024 KH

BOPLA
A Phoenix Mecano Company

"Schutzvermerk nach DIN ISO 16016 beachten" *"Please pay attention to copyright note DIN ISO 16016"*