DRAWING MADE IN THIRD ANGLE PROJECTION

THIS DRAWING IS UNPUBLISHED. RELEASED FOR PUBLICATION ,19 .
© COPYRIGHT 19 BY AMP INCORPORATED. ALL INTERNATIONAL RIGHTS RESERVED.

LOC	DIST	P	F
G	14		

REVISIONS

ZONE	LTR	DESCRIPTION	DATE	APPD
	C	REV & REDRAWN PER 0720-0061-93	4-19-93	TAB DAP

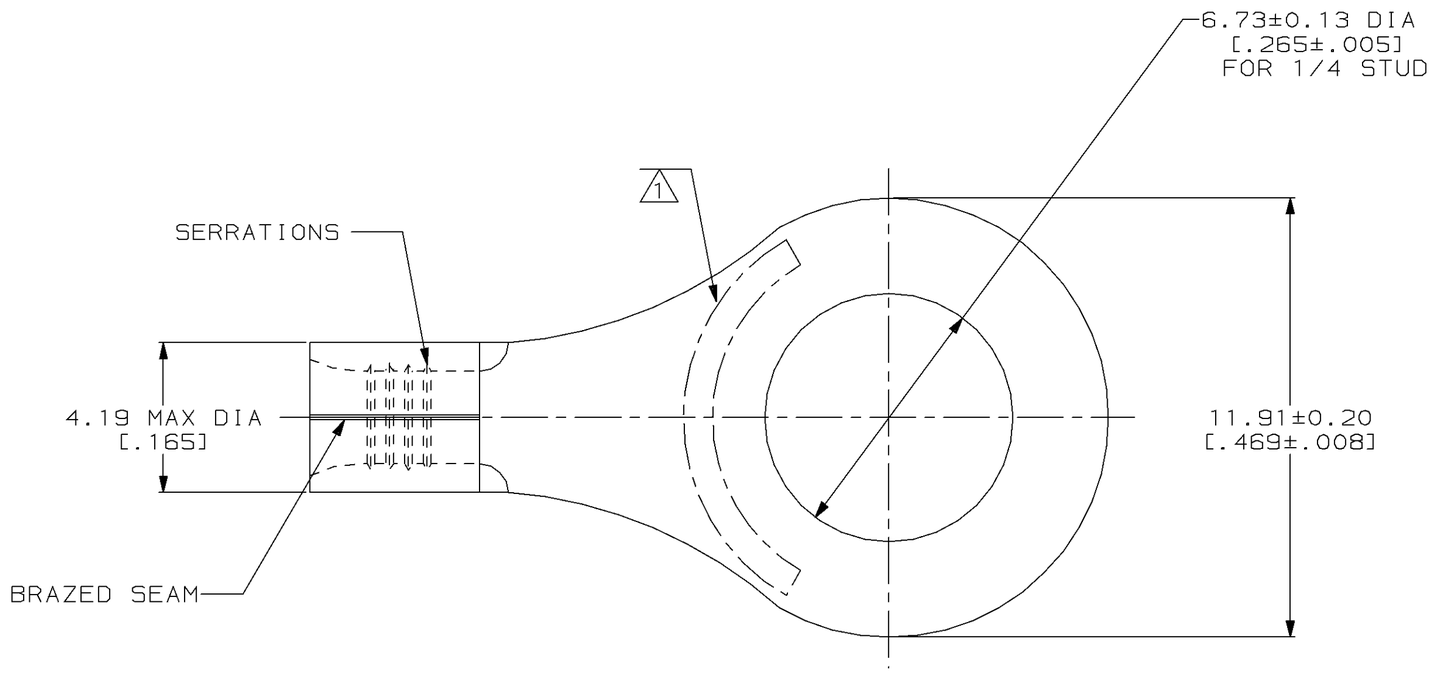

METRIC

DIMENSIONS LISTED IN mm [INCHES]

AMP WIRE RANGE	UL E13288 Listed
16-14 AWG SOLID OR STRANDED	NOT APPLICABLE
CSA LR7189 Certified	MILITARY P/N AND CLASS
NOT APPLICABLE	NOT APPLICABLE

1 STAMP AMP 16-14* APPROX AS SHOWN

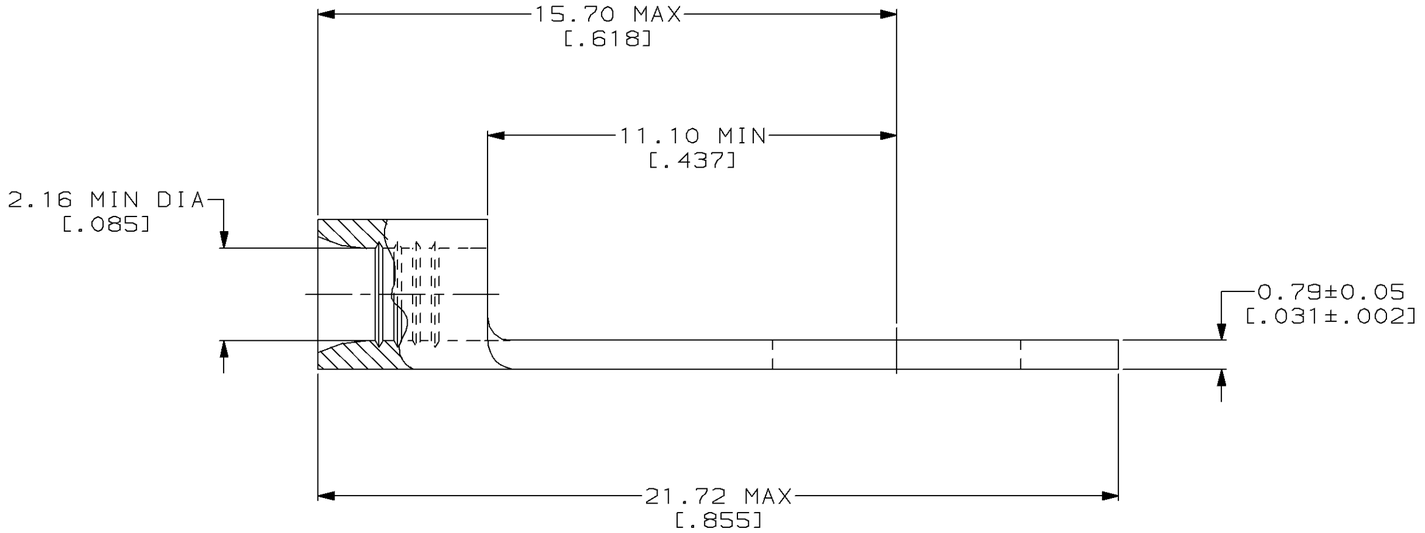

322733

AMP INCORPORATED CUSTOMER SERVICE SYSTEMS

FOR ADDITIONAL PRODUCT INFORMATION OR COPIES OF DRAWINGS AND TECHNICAL DOCUMENTS	PRODUCT INFORMATION CENTER 1-800-522-6752
FOR APPLICATION TOOLING INFORMATION	TOOLING ASSISTANCE CENTER 1-800-722-1111
FOR ORDER ENTRY	1-800-526-5142

MAX RECOMMENDED OPERATING TEMPERATURE: 343°C MAX

VOLTAGE RATING: NOT APPLICABLE

WIRE CROSS SECTIONAL AREA RANGE: 1.04-2.62mm² [2,050-5,180] CIR MILS SOLID OR STRANDED

THIS DRAWING IS A CONTROLLED DOCUMENT FOR AMP INCORPORATED. IT IS SUBJECT TO CHANGE AND THE CONTROLLING ENGINEERING ORGANIZATION SHOULD BE CONTACTED FOR THE LATEST REVISION.

DO NOT SCALE PRINT.
UNLESS SPECIFIED
~~DIMENSIONS IN mm [INCHES]~~
TOLERANCES ON :
2 PLC DEC ± -
3 PLC DEC ± -
ANGLES ± -

MATERIAL: COPPER PER ASTM B-152 ANNEALED

FINISH: NICKEL PLATE 0.00762[.000300] MIN THK PER QQ-N-290

DR 4-19-93 TA BRINKMAN
CHK 4-19-93 DA PATTERSON
APPD 4-19-93 DE MILLER
APPD 4-19-93 JL MECKLEY
PRODUCT SPEC -
APPLICATION SPEC -
WEIGHT -

322733
PART NO

AMP Incorporated
Harrisburg, PA 17105-3608

NAME
TERMINAL, RING TONGUE, HEAT RESISTANT, STRATO-THERM™

SIZE	CAGE CODE	DRAWING NO
C	00779	C-322733

SCALE 8:1 SHEET 1 OF 1

CUSTOMER DRAWING

AMP 1471-6 REV 3-92

02 AUG 1993 07:46:04 AMP26463 <US128A>DEPT1123>DWG1123>U.STRATO-THERM>U.TERMINALS