THIS DRAWING IS UNPUBLISHED. RELEASED FOR PUBLICATION – ,– .
© COPYRIGHT – By – ALL RIGHTS RESERVED.

REVISIONS

P	LTR	DESCRIPTION	DATE	DWN	APVD
	H	REL –1 PER 0G3A–0648–00	04OCT00	JR	MS
	H1	REVISED PER ECO–16–017419	13MAR2017	RS	DR

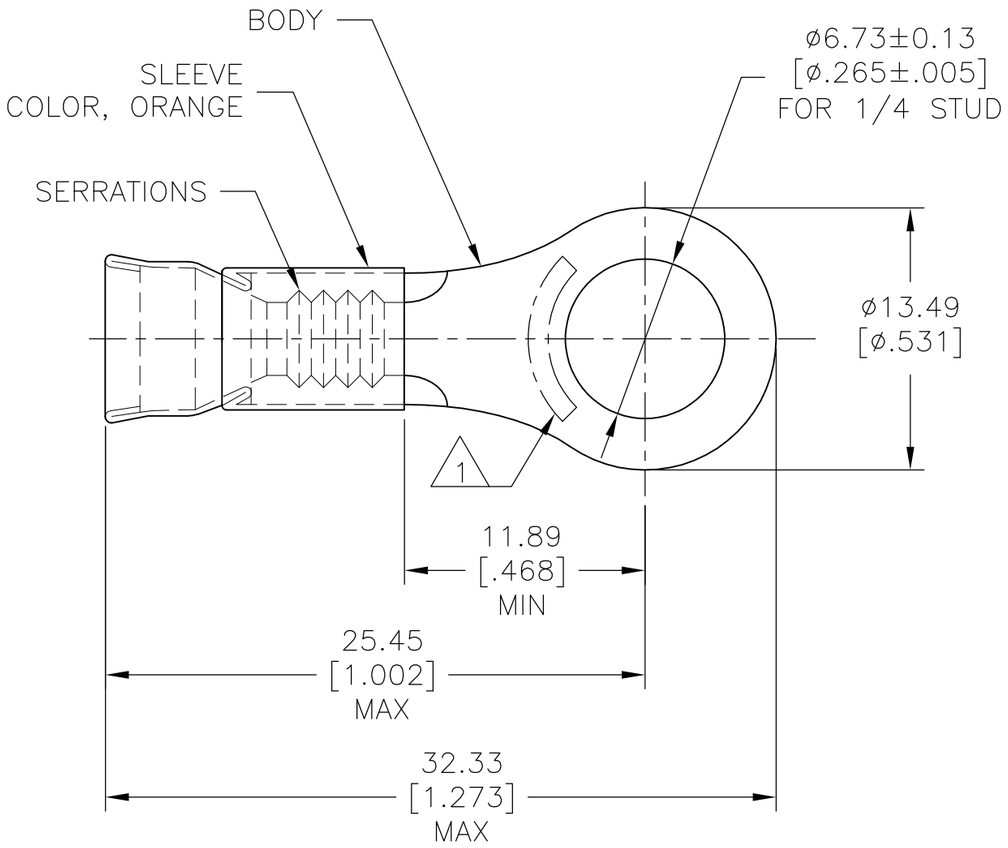

1. STAMP AMP 12–10 APPROX AS SHOWN.
2. WIRE INSUL DIA, ø3.81–5.84 [ø.150–.230].
3. TONGUE MATL THK, 1.02±0.05[.040±.002].
4. NO ORANGE COLOR CODE ON BARREL TO DENOTE NICKEL MATERIAL.
5. PRELIMINARY – NOT FOR PRODUCTION.

4	2,500	ON TAPE, REEL	5 323751–2
	500	LOOSE PIECE	323751
	QTY	PACKAGE TYPE	PART NO

AMP INCORPORATED
CUSTOMER SERVICE SYSTEM

FOR ADDITIONAL PRODUCT INFORMATION OR COPIES OF DRAWINGS AND TECHNICAL DOCUMENTS	PRODUCT INFORMATION CENTER 1–800–522–6752
FOR APPLICATION TOOLING INFORMATION	TOOLING ASSISTANCE CENTER 1–800–722–1111
FOR ORDER ENTRY	1–800–526–5142

MAX RECOMMENDED OPERATING TEMPERATURE:
649°C [1200°F]

VOLTAGE RATING:
–
–

CIRCULAR MIL AREA:
2.62mm² –6.64mm² [5180–13100]
STRANDED WIRE

THIS DRAWING IS A CONTROLLED DOCUMENT.

DIMENSIONS: mm [INCHES]

TOLERANCES UNLESS OTHERWISE SPECIFIED:

0 PLC	± –
1 PLC	± –
2 PLC	± 0.20 [.008]
3 PLC	± –
4 PLC	± –
ANGLES	± –

MATERIAL
BODY, NI PER ASTM B162
SLEEVE, NI SIL PER ASTM B122

FINISH
–

DWN	L OLMEDA	10OCT94
CHK	M ELLIS	10OCT94
APVD	S BORTNER	10OCT94
PRODUCT SPEC	—	
APPLICATION SPEC	—	
WEIGHT	—	

TE Connectivity

NAME
TERMINAL, RING TONGUE,
STRATO–THERM™, DIAMOND GRIP™,
WIRE SIZE, 12–10 AWG

SIZE	CAGE CODE	DRAWING NO	RESTRICTED TO
A3	00779	C–323751	—

CUSTOMER DRAWING | SCALE 4:1 | SHEET 1 OF 1 | REV H1