THIS DRAWING IS UNPUBLISHED. RELEASED FOR PUBLICATION –,– .
© COPYRIGHT – BY TYCO ELECTRONICS CORPORATION. ALL RIGHTS RESERVED.

LOC	DIST
G	14

REVISIONS

P	LTR	DESCRIPTION	DATE	DWN	APVD
	02	REV PER ECR 07-020486	28AUG07	JR	TM

AMP
WIRE RANGE

22 AWG
SOLID OR STRANDED

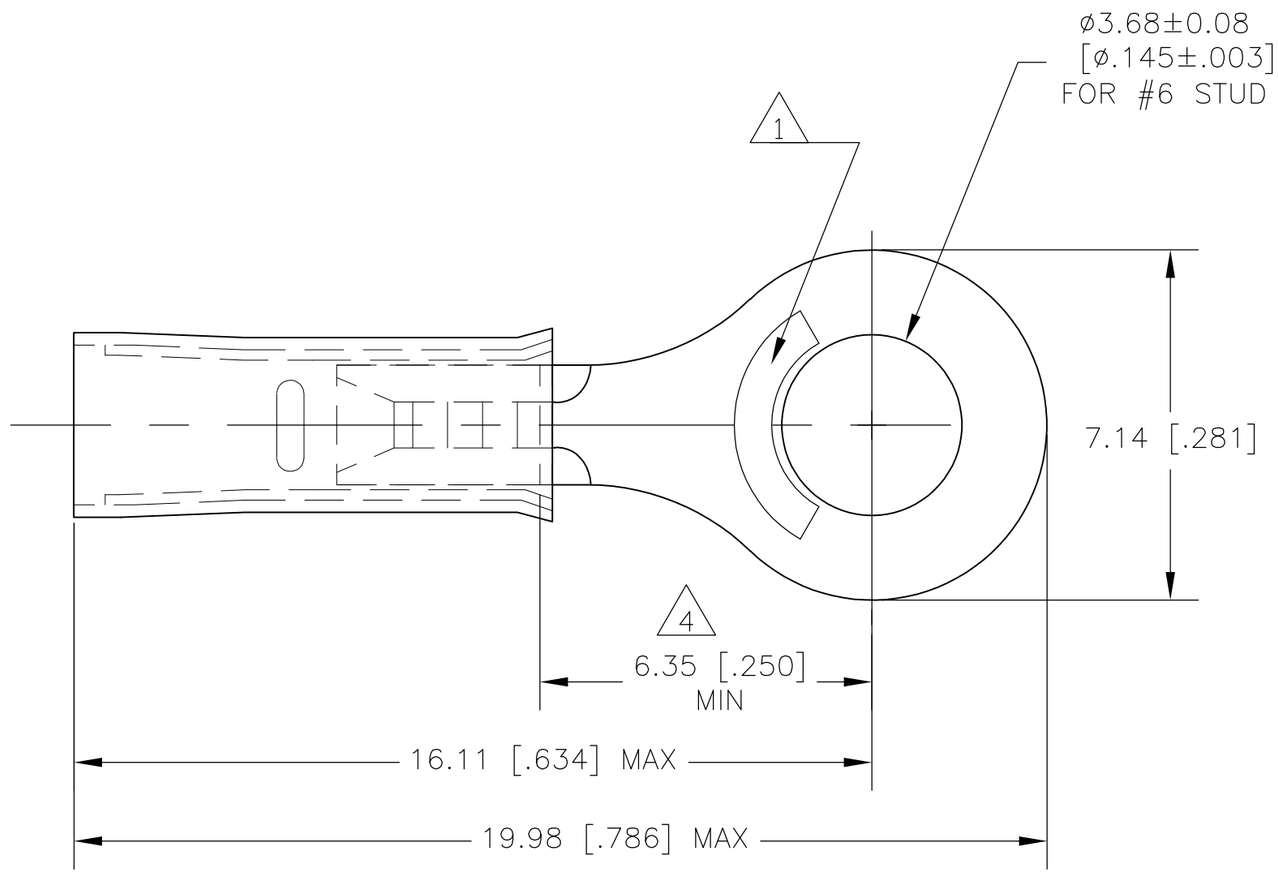

1. STAMP AMP 22, LOCATE APPROX AS SHOWN.
2. WIRE INSULATION DIA IS 0.9-2.5 [.035-.100]
3. TONGUE MATERIAL THK IS 0.79±0.05 [.031±.002]
4. DIMENSION APPLIES FROM EDGE OF METAL WIRE BARREL TO CENTER OF STUD HOLE.
5. MATERIAL: BODY-COPPER PER ASTM B-152
   SLEEVE-NYLON, BLACK
6. FINISH: BODY-TIN PLATE PER ASTM B-545
7. MAX RECOMMENDED OPERATING 105°C
8. VOLTAGE RATING 300V MAX
9. CIRCULAR MIL AREA 0.26-0.41mm2 [509-810] CMA.

500	LOOSE PIECE	151439
QTY	PACKAGE TYPE	PART NO

THIS DRAWING IS A CONTROLLED DOCUMENT.

DIMENSIONS: INCHES

TOLERANCES UNLESS OTHERWISE SPECIFIED:
0 PLC ± –
1 PLC ± –
2 PLC ± –
3 PLC ± .005
4 PLC ± –
ANGLES ± 5°

MATERIAL – 5

FINISH – 6

DWN	jr ruth	09MAY06
CHK	T MICHIELUTTI	09MAY06
APVD	T MICHIELUTTI	09MAY06
PRODUCT SPEC	—	
APPLICATION SPEC	—	
WEIGHT	—	

Tyco Electronics
Tyco Electronics Corporation
Harrisburg, PA 17105-3608

NAME
TERMINAL, RING TONGUE, PIDG,
WIRE SIZE: 22 AWG
—

SIZE	CAGE CODE	DRAWING NO	RESTRICTED TO
A3	00779	C-151439	—

CUSTOMER DRAWING

SCALE	SHEET	REV
8:1	1 OF 1	02