AMP

AMPLIVAR* Stator Receptacles with FASTON* Mating End

NOTE

All numerical values are in metric units [with U.S. customary units in brackets]. Dimensions are in millimeters [and inches]. Unless otherwise specified, dimensions have a tolerance of ±0.13 [.005] and angles have a tolerance of ±2°. Figures and illustrations are for identification only and are not drawn to scale.

1. INTRODUCTION

This specification covers requirements for the application of AMP* AMPLIVAR Stator Receptacles with FASTON Mating Ends. These receptacles fit the cavities of a motor stator and terminate magnet wire from the motor coil. They mate with 6.35 x 0.81 [.250 x .032] FASTON Tab Terminals when the motor is mounted in the end product. These receptacles will accept magnet wire sizes 27 to 15 AWG.

When corresponding with AMP personnel, use the terminology provided on this specification to help facilitate your inquiry for information. Basic terms and features of components are provided in Figure 1.

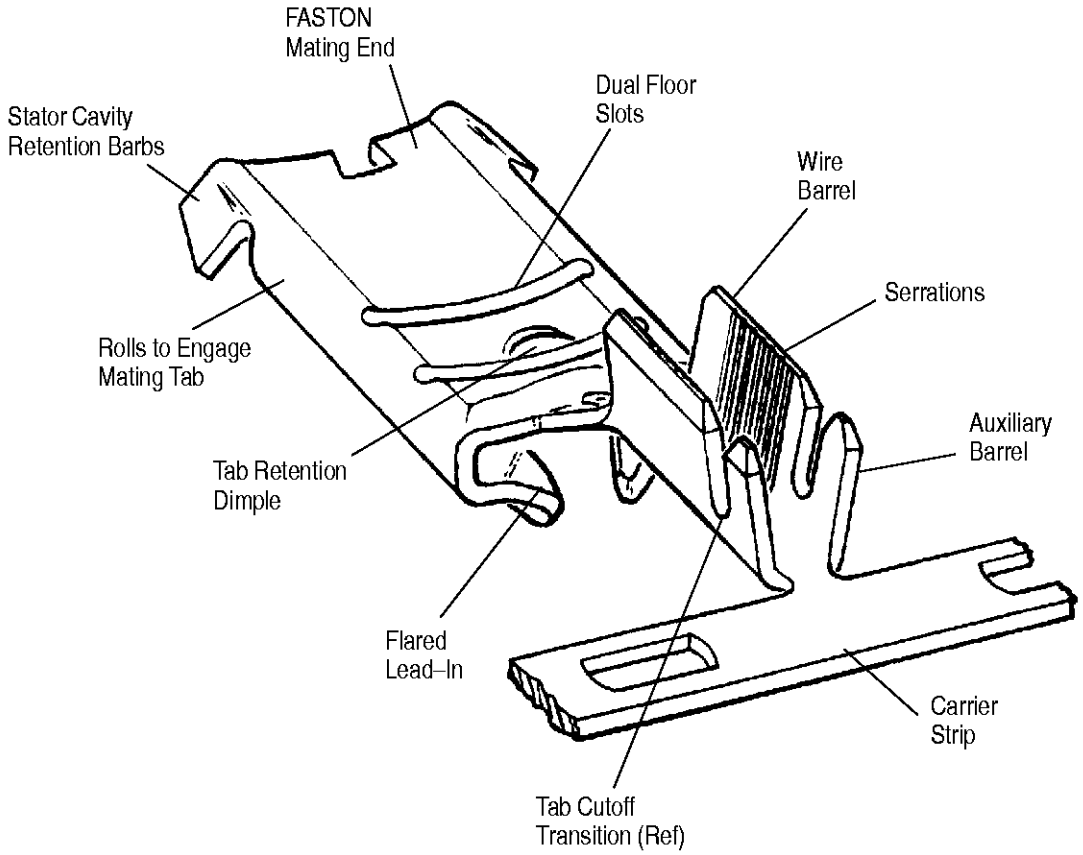

Figure 1

2. REFERENCE MATERIAL

2.1. Revision Summary

This paragraph is reserved for a revision summary covering the most recent additions and changes made to this specification which include the following:

Per EC: 0990–1026–97

- Upgraded specification to current requirements
- Added second wire to figures 2, 3, and 5
- Changed art in figures 2, 3, and 5 to remove auxiliary wire barrel

This AMP controlled document is subject to change. For latest revision call the AMP FAX number.
©Copyright 1997 by AMP Incorporated. All Rights Reserved.
*Trademark

2.2. Customer Assistance

Reference Part Number 63480 and Product Code 1181 are representative numbers of AMPLIVAR Stator Receptacles with FASTON Mating End. Use of these numbers will identify the product line and expedite your inquiries through an AMP service network established to help you obtain product and tooling information. Such information can be obtained through a local AMP Representative (Field Sales Engineer, Field Applications Engineer, etc.) or, after purchase, by calling the Tooling Assistance Center or AMP FAX/Product Information number at the bottom of page 1.

2.3. Drawings

AMP Customer Drawings for specific products are available from the service network. The information contained in Customer Drawings takes priority if there is a conflict with this specification or with any other technical documentation supplied by AMP Incorporated.

2.4. Instructional Material

The following list includes available AMP instruction sheets (408–series) that provide assembly procedures for product, operation, maintenance and repair of tooling.

Document Number	Document Title
408–3295	Preparing Reel of Contacts for Applicator Tooling
408–7424	Checking Terminal Crimp Height or Gaging Die Closure
408–9816	Handling of Reeled AMP Products
408–9866	AMP Terminal Reel Flange Removal Tool 354030–1

3. REQUIREMENTS

3.1. Storage

A. Shelf Life

The contacts should remain in the shipping containers until ready for use to prevent damage. These products should be used on a first in, first out basis to avoid storage contamination.

B. Reeled Contacts

When using reeled contacts, store coil wound reels horizontally and traverse wound reels vertically.

C. Chemical Exposure

Do not store contacts near any chemicals listed below, as they may cause stress corrosion cracking in the contacts.

Alkalies	Ammonia	Citrates	Phosphates Citrates	Sulfur Compounds
Amines	Carbonates	Nitrites	Sulfur Nitrites	Tartrates

NOTE *Where the above environmental conditions exist, phosphor–bronze contacts are recommended instead of brass if available.*

3.2. Wire Selection and Preparation

This product line will accept film–insulated magnet wire, sizes 27–15 having a maximum outside diameter of 1.52 [.060]. No wire preparation is necessary for termination. The only requirement is that the wire end must be straight and without deformations. There are contact designs for single and multiple wire applications. The AMPLIVAR wire barrel of these receptacles is designed to pierce the wire insulation, extruding the bare conductor into the wire barrel serrations, thereby providing a corrosion–resistant airtight connection. Individual wire sizes and crimp dimensions for which contact designs are available are provided in Figure 2.

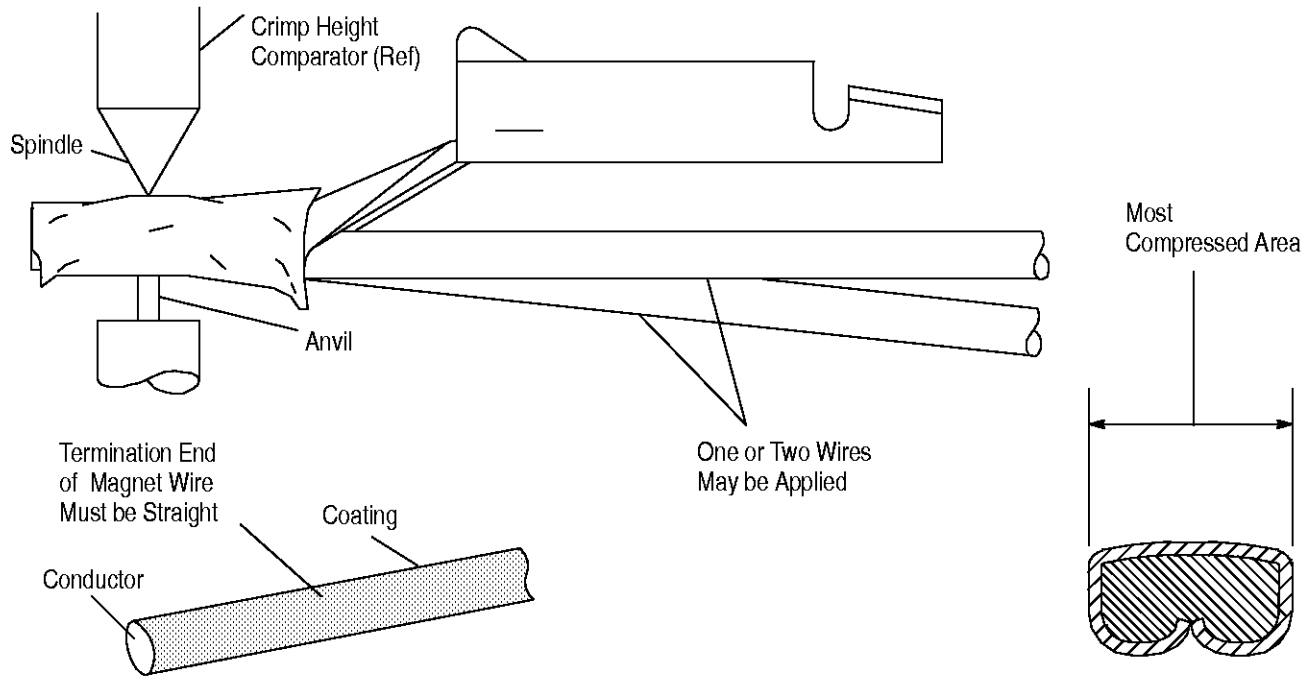

WIRE SIZE RANGE	WIRE SIZE AWG	WIRE SIZE, CMA	INSULATION DIA (Max)	WIRE BARREL CRIMP	
				HEIGHT	WIDTH (Ref)
27–22 AWG	27	259	0.41 [.016]	1.17–1.07 [.046–.042]	1.78 [.070]
	26	320	0.46 [.018]		
	25.5	361	0.48 [.019]		
	25	400	0.51 [.020]		
	24	497	0.56 [.022]		
	23	620	0.64 [.025]		
	22.5	692	0.66 [.026]	1.27–1.17 [.050–.046]	
	22	767	0.71 [.028]		
21–15 AWG	21.5	858	0.74 [.029]	1.45–1.35 [.057–.053]	2.79 [.110]
	21	961	0.79 [.031]		
	20.5	1076	0.84 [.033]		
	20	1197	0.89 [.035]		
	19	1490	0.99 [.039]		
	18	1858	1.09 [.043]		
	17	2323	1.22[.048]	1.6–1.5 [.063–.059]	
	16	2894	1.37 [.054]		
	15	3624	1.52 [.060]	1.75–1.65 [.069–.065]	
2800–7400 CMA	—	2800–3500	1.57 [.062]	1.63–1.52 [.064–.060]	3.94 [.155]
	—	3600–4500	1.65 [.065]	1.7–1.60 [.067–.063]	
	—	4600–5700	1.78 [.070]	1.83–1.73 [.072–.068]	
	—	5800–7400	1.9 [.075]	1.96–1.85 [.077–.073]	

Figure 2

3.3. Crimped Contact Requirements

A. Crimp Height

The crimp applied to the wire barrel portion of the contact is measured within the most compressed area, and is most critical in ensuring optimum electrical and mechanical performance of the crimped contact. The contact wire barrel crimp height and crimp width must be within the dimensions provided in Figure 2.

B. Effective Crimp Length

The effective crimp length is the area where the optimum crimp pressure is applied over the parallel length of the wire barrel. It does not include the bellmouth area. The crimp should be measured in the approximate center of the effective crimp length area. See Figure 3.

C. Bellmouth

A bellmouth caused by the extrusion of metal during crimping is permissible. See Figure 3.

D. Cutoff Tab and Burr

The cutoff tab and burr resulting from the contact being cut from the carrier strip must be within limits shown in Figure 3.

E. Wire Location

After crimping, the end of the magnet wire must be at least flush with the end of the wire barrel. It may extend beyond the end of the wire barrel. The extension from the end of the wire barrel will depend on your application requirements. See Figure 3.

F. Wire Barrel Flash

The wire barrel flash shall not exceed the dimensions shown in Figure 3 in Section X–X.

G. Wire Barrel Seam

Wire barrel seam shall be completely closed with no conductor slivers protruding from it. See Figure 3.

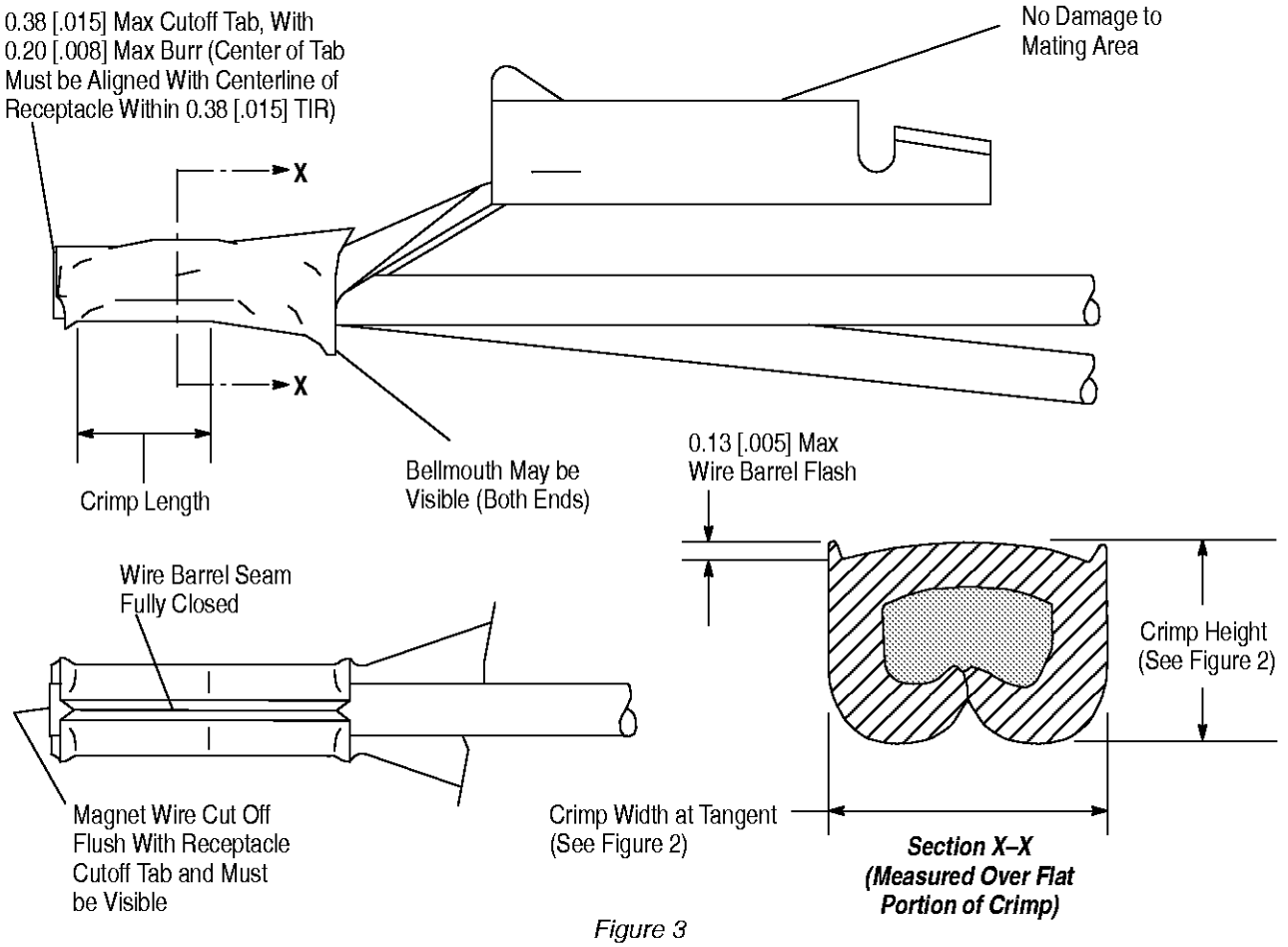

Figure 3

H. Twist or Roll

The crimped wire must be aligned with uncrimped portion of contact to within the limit shown in Figure 4.

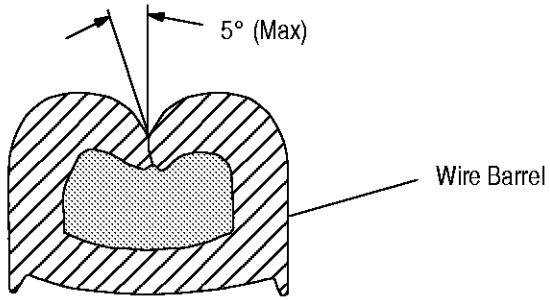

Figure 4

I. Straightness

The force applied during crimping may cause some bending between the crimped wire barrel and the uncrimped portion of the contact. Such deformation is acceptable within the up and down, and side to side limits provided in Figure 5.

1. Up and Down

The crimped contact, including cutoff tab and burr, shall not be bent above or below the datum line more than the amount shown in Figure 5.

2. Side–to–Side

The side–to–side bending of the contact may not exceed the limits provided in Figure 5.

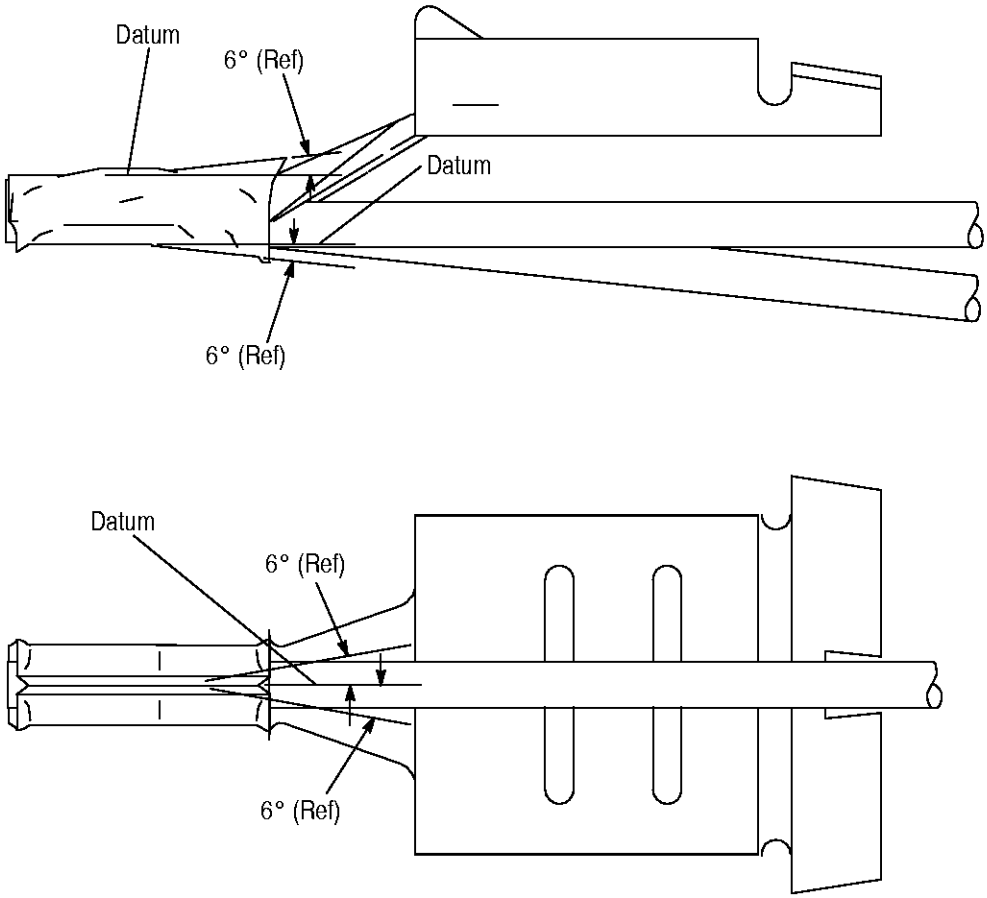

Figure 5

3.4. Tensile Strength

Crimp tensile strength shall be 70% of the wire tensile strength.

3.5. Mating Tab Dimensions

Features and dimensional requirements for tab terminals to be mated with AMPLIVAR Stator Receptacles with FASTON Mating Ends are shown in Figure 6.

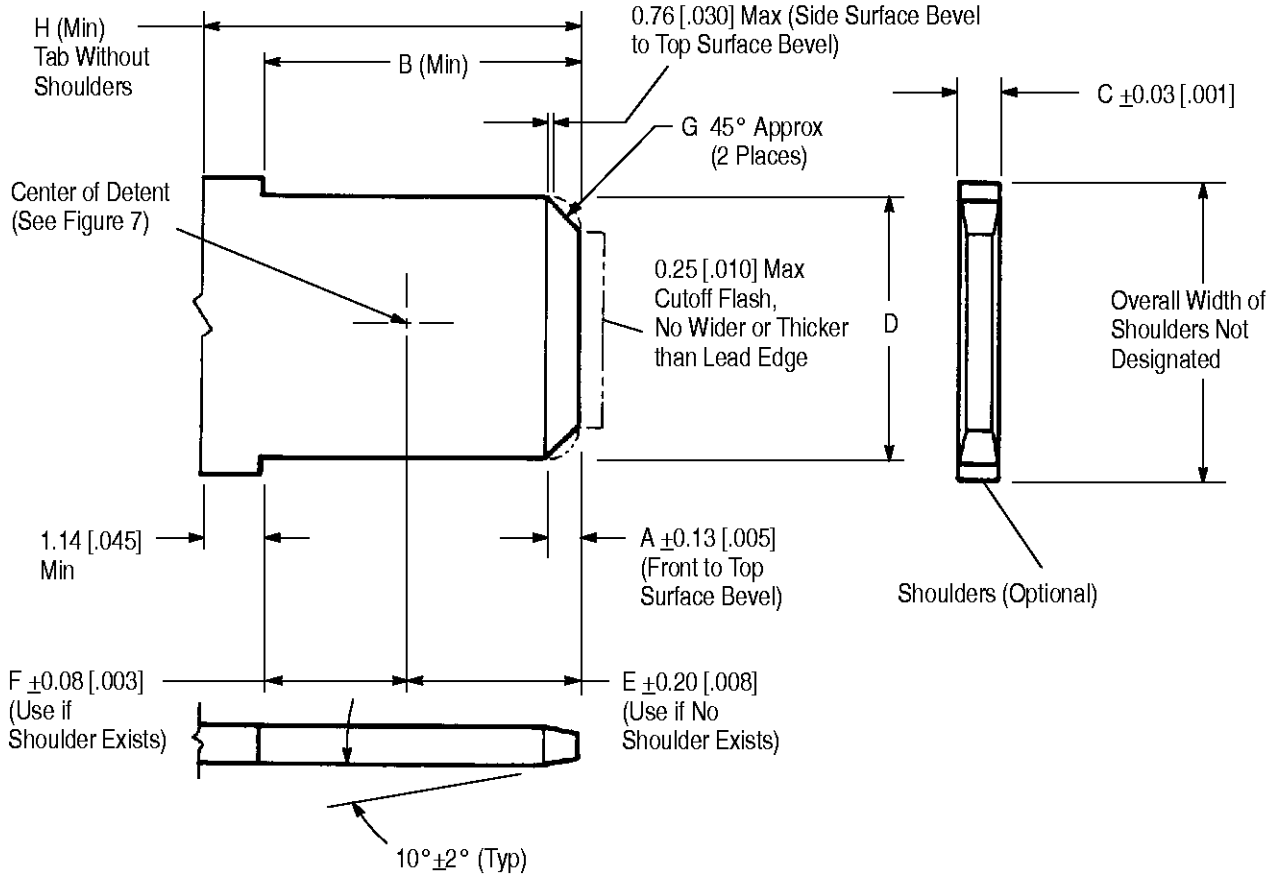

TAB SIZE (Nominal)	DIMENSION							
	A	B	C	D	E	F	G	H
6.35 x 0.81 [.250 x .032] With Dimple	0.89 [.035]	7.80 [.307]	0.81 [.032]	6.35 [.250]	3.86 [.152]	4.06 [.160]	1.27 [.050]	8.94 [.352]
6.35 x 0.81 [.250 x .032] With Hole	0.89 [.035]	7.80 [.307]	0.81 [.032]	6.35 [.250]	4.52 [.178]	3.40 [.134]	1.27 [.050]	8.94 [.352]

NOTES: (1) Bevel may be a straight line or a radius within G ±0.51 [±.020].
(2) Tab shall be flat (0.03 [.001] inch/inch); and free from burrs greater than 10% of tab thickness, or raised plateaus, except as noted in Paragraph 3.7.
(3) Measurements shall not include plating, burrs, or flatness tolerance.

Figure 6

3.6. Tab Retention and Detent Configurations

A tab configuration having no locking feature may be used for applications where low mating retention forces are desirable. Where higher forces are sought, a tab with a detent meeting specific requirements should be used. Hole detents provide the greatest retention forces, while dimples provide acceptable medium–range forces. Requirements are shown in Figure 7.

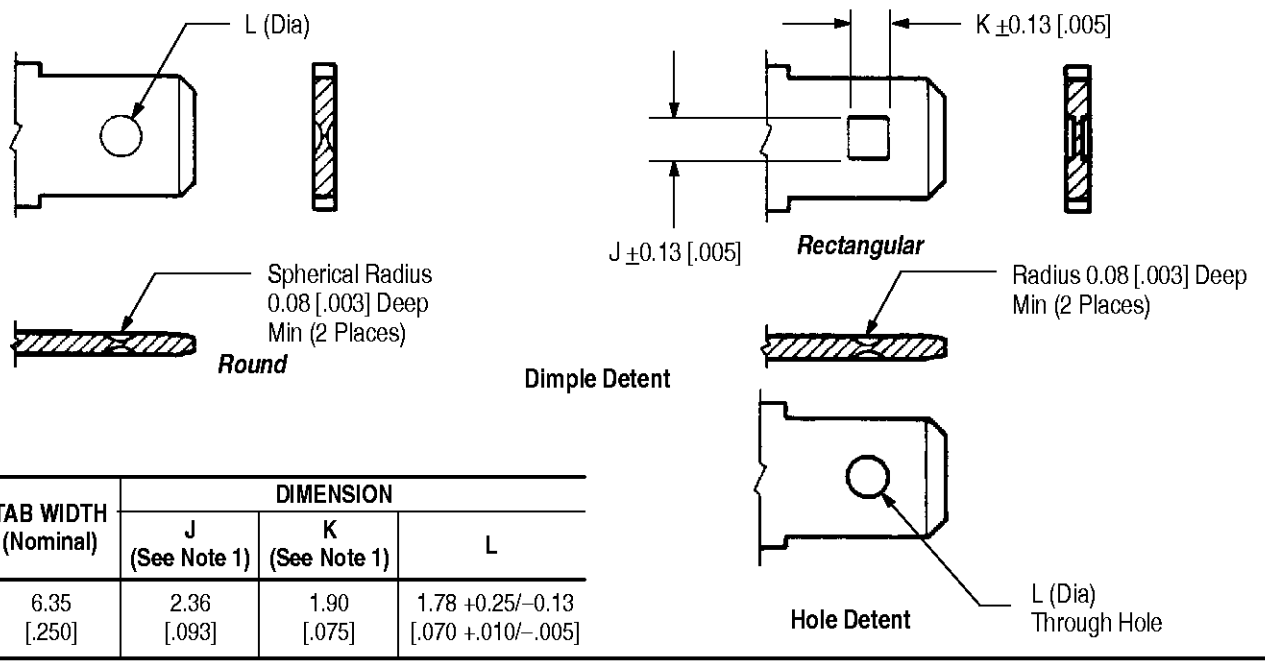

TAB WIDTH (Nominal)	DIMENSION		
	J (See Note 1)	K (See Note 1)	L
6.35 [.250]	2.36 [.093]	1.90 [.075]	1.78 +0.25/–0.13 [.070 +.010/–.005]

NOTES: (1) Dimensions apply to dimple detents only.
(2) Detents may be at the same location on the longitudinal centerline if no shoulder or obstruction is present at the base of the tab.

Figure 7

3.7. Mating Overcycle and Testing

The forces required to mate and unmate test mating tabs and receptacles shall be as specified in Figure 8. Measure the force using a testing device capable of holding the reading. It must also provide accurate alignment with slow and steady mating and unmating of the test tab and receptacle.

NOTE

Testing may be done using a gage as described in Residential Controls—Quick–Connect Terminals, ANSI/NEMA DC2—1982. Test tabs shall be dimensioned as shown in Figures 6 and 7 of this specification, except that the "C" dimension shall have a tolerance of 0.008 [.0003] for brass tabs and 0.013 [.0005] for steel; and raised plateaus around detents shall be limited to a total of 0.025 [.001] for both sides. Test tabs meeting these requirement and assuring accurate test results can be purchased from AMP Incorporated.

TAB SIZE	FORCE (N [lb])				
	FIRST MATING (Maximum) INDIVIDUAL	FIRST UNMATING (Minimum)		SIXTH UNMATING (Minimum)	
		AVERAGE	INDIVIDUAL	AVERAGE	INDIVIDUAL
TEST TAB AND UNPLATED RECEPTACLE					
6.35 [.250]	80 [18]	27 [6]	18 [4]	22 [5]	18 [4]
TEST TAB AND TIN–PLATED RECEPTACLE					
6.35 [.250]	76 [17]	22 [5]	13 [3]	18 [4]	13 [3]

Figure 8

3.8. Repair

These receptacles are not repairable once termination has been made. Any defective receptacles should be removed and replaced with a new one.

4. QUALIFICATION

There are no agency qualifications required for the AMPLIVAR Stator Receptacles with FASTON Mating Ends.

5. TOOLING

AMP Incorporated does not provide application tooling for the AMPLIVAR Stator Receptacles. They are made to fit into the customer's process and production line equipment. The receptacles are installed and terminated during the motor coil winding operation.

6. VISUAL AID

Figure 9 shows a typical application of AMPLIVAR Stator Receptacles with FASTON Mating End. This illustration should be used by production personnel to ensure a correctly applied product. Applications which DO NOT appear correct should be inspected using the information in the preceding pages of this specification and in the instructional material shipped with the product or tooling.

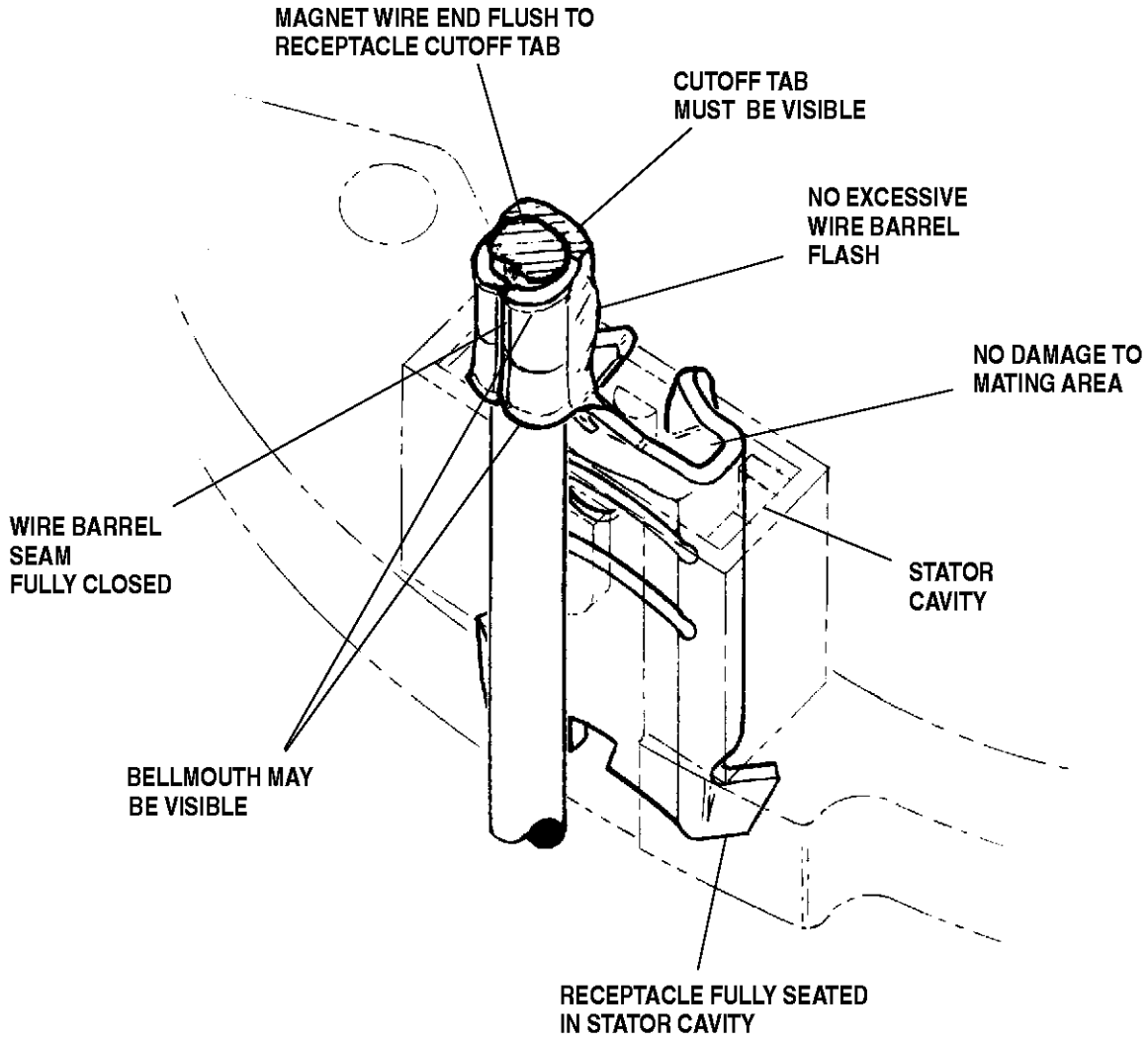

FIGURE 9. VISUAL AID