THIS DRAWING IS UNPUBLISHED. RELEASED FOR PUBLICATION –,– .
© COPYRIGHT – By – ALL RIGHTS RESERVED.

LOC	DIST
AF	50

REVISIONS

P	LTR	DESCRIPTION	DATE	DWN	APVD
	E	REVISE PER ECR–13–013738	28AUG14	GRZ	JL

REELING OFF BOTTOM OF REEL WIRE BARRELS DOWN

63480–2 ③

63480–1 ②

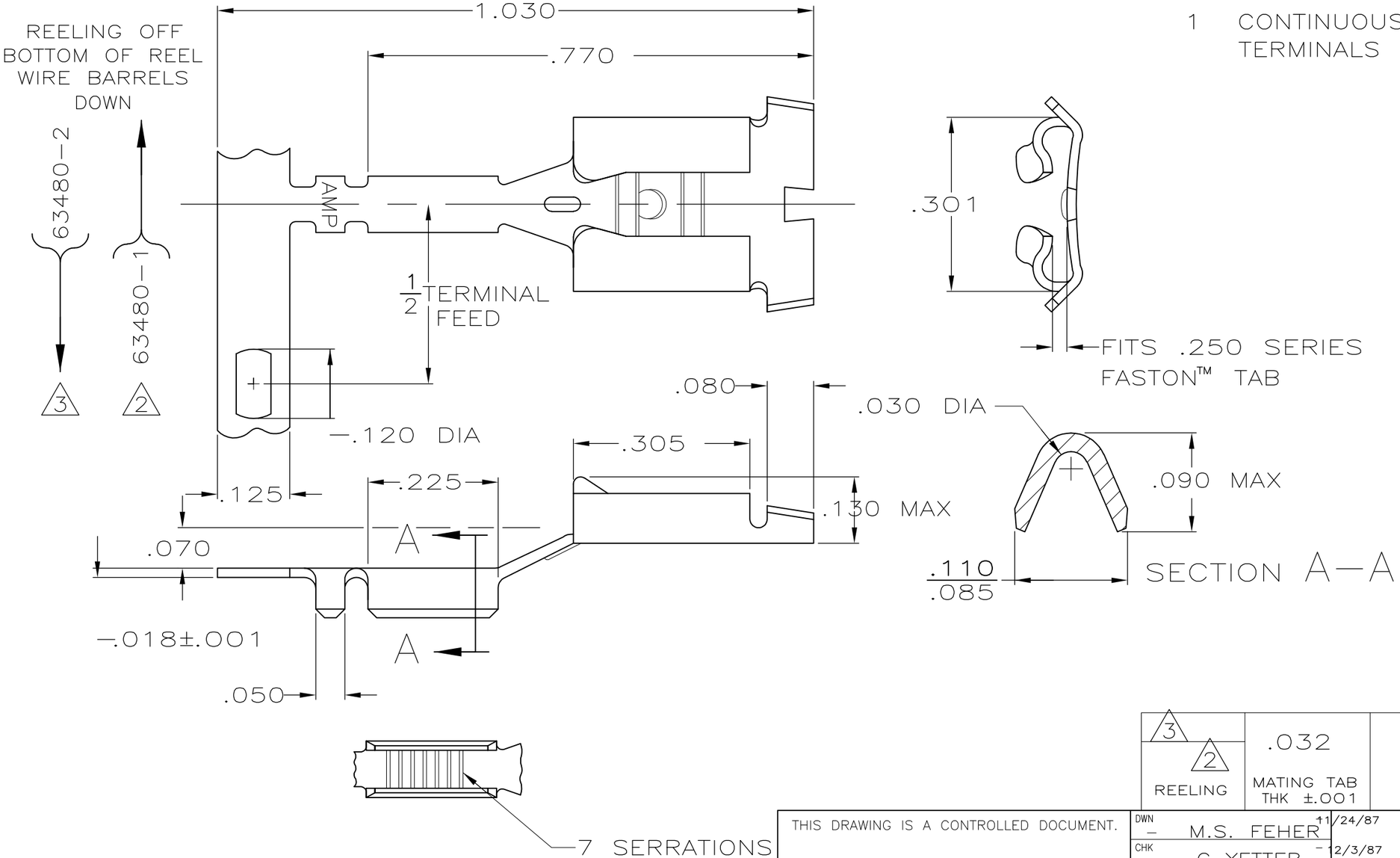

1 CONTINUOUS STRIP ON REELS WITH TERMINALS LOCATED ON .620 CENTERS.

③ ② REELING	.032 MATING TAB THK ±.001	#27–#22 AWG MAGNET WIRE RANGE	63480–2 63480–1

THIS DRAWING IS A CONTROLLED DOCUMENT.

DIMENSIONS: INCHES

TOLERANCES UNLESS OTHERWISE SPECIFIED:

0 PLC	± –
1 PLC	± –
2 PLC	± –
3 PLC	± .010
4 PLC	± –
ANGLES	± –

MATERIAL: BRASS

FINISH: PRE–TIN

DWN	M.S. FEHER	11/24/87
CHK	G YETTER	12/3/87
APVD	D SCHEWNK	12/3/87
PRODUCT SPEC	C G ATHERTON	12/3/87
APPLICATION SPEC	–	
WEIGHT	–	

TE Connectivity

STATOR RECEPTACLE

AMPLIVAR™

SIZE	CAGE CODE	DRAWING NO	RESTRICTED TO
A3	00779	C–63480	–

CUSTOMER DRAWING

SCALE	SHEET	REV
5:1	1 OF 1	E