THIS DRAWING IS UNPUBLISHED. RELEASED FOR PUBLICATION -,- .
© COPYRIGHT - BY TYCO ELECTRONICS CORPORATION. ALL RIGHTS RESERVED.

| LOC | DIST |
|---|---|
| AF | 50 |

REVISIONS

| P | LTR | DESCRIPTION | DATE | DWN | APVD |
|---|---|---|---|---|---|
| | B | REVISED PER ECR-07-014127 | 26SEP07 | HMR | DD |

1 CONTINUOUS STRIP ON REEL.

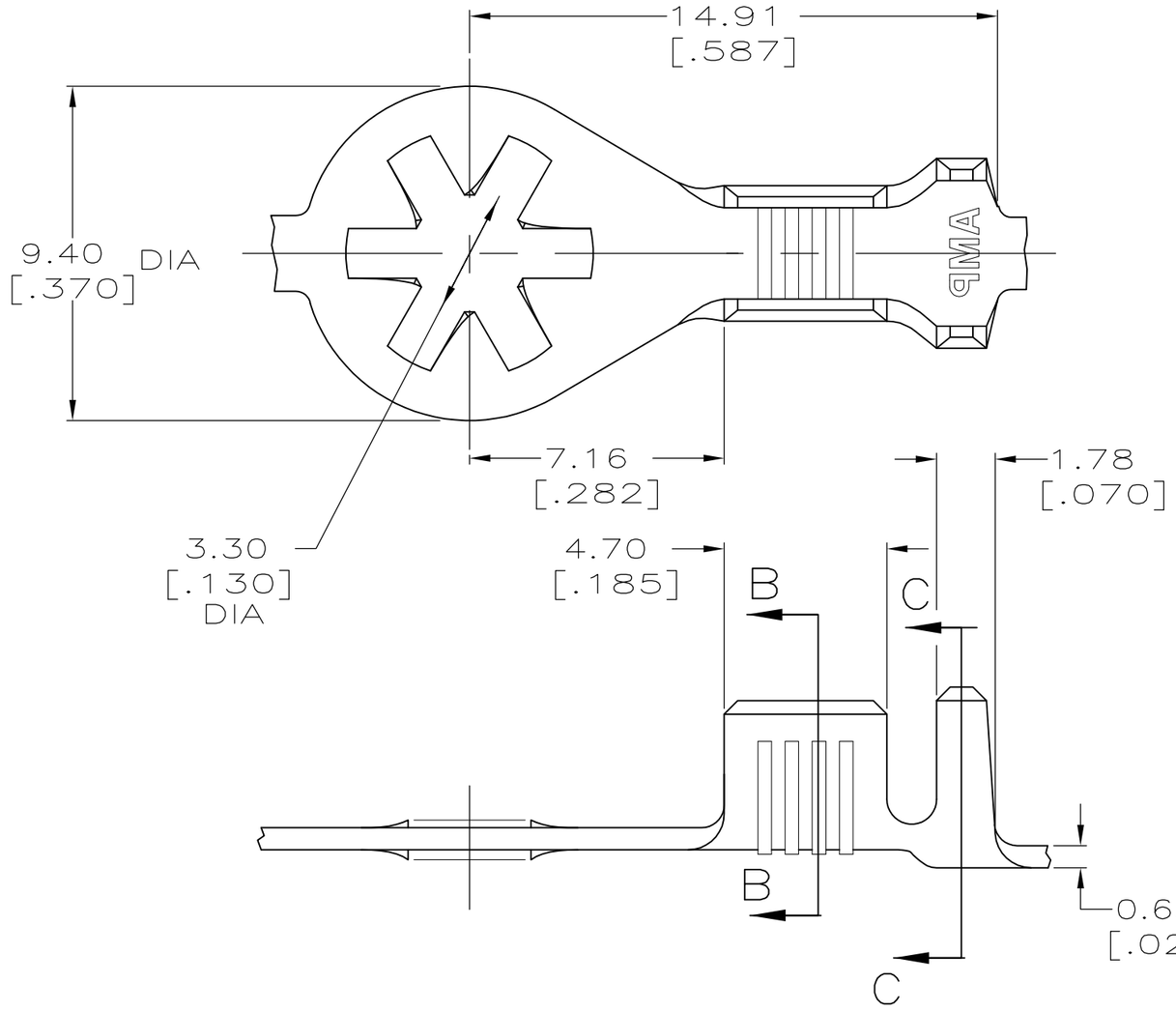


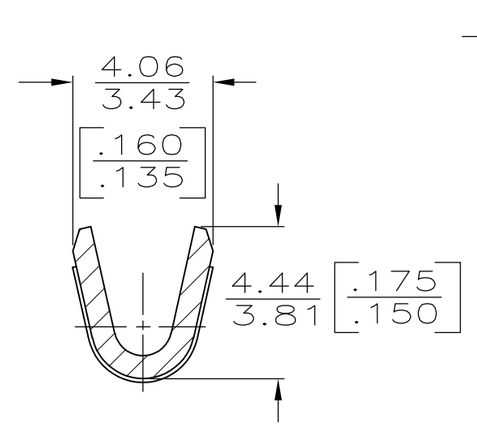


SECTION B–B

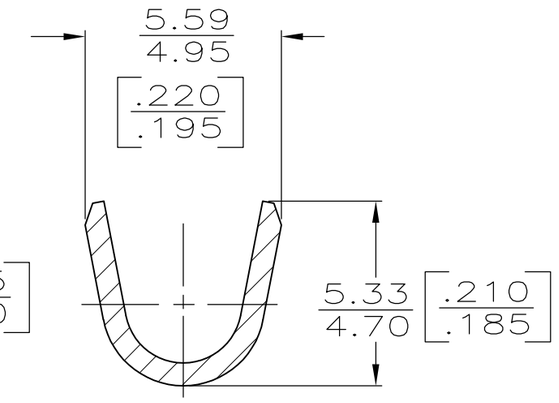


SECTION C–C

| 2.67–3.68 DIA [.105–.145] | 0.8 – 2.0mm² [18–14] AWG | 63640-1 |
|---|---|---|
| INSULATION RANGE | WIRE RANGE | PART NO |

| TYPE | WIDTH | STRIP LENGTH ±0.38 [±.015] | TYPE | WIDTH | HEIGHT | WIRE |
|---|---|---|---|---|---|---|
| F OR 0 | 4.57 [.180] | 6.35 [.250] | F | 3.30 [.130] | 2.18 [.086] | 2.0mm² [14] |
| | | | | | 1.98 [.078] | 1.3mm² [16] |
| | | | | | 1.85 [.073] | 0.8mm² [18] |
| INSUL BARREL CRIMP | | | WIRE BARREL CRIMP | | ±0.051 [±.002] | |

THIS DRAWING IS A CONTROLLED DOCUMENT.

DIMENSIONS: INCHES

TOLERANCES UNLESS OTHERWISE SPECIFIED:
0 PLC ± –
1 PLC ± –
2 PLC ± 0.25 [.010]
3 PLC ± –
4 PLC ± –
ANGLES ± –

MATERIAL: T2 STEEL

FINISH: 0.002032 [.000080] MIN TIN PL PER MIL-T-10727

| | | |
|---|---|---|
| DWN | P FORTNEY | 2/12/92 |
| CHK | JR RUTH | 2/12/92 |
| APVD | G YETTER | 2/12/92 |
| PRODUCT SPEC | – | |
| APPLICATION SPEC | – | |
| WEIGHT | – | |

CUSTOMER DRAWING

Tyco Electronics

Tyco Electronics Corporation
Harrisburg, PA 17105-3608

NAME: RING

| SIZE | CAGE CODE | DRAWING NO | RESTRICTED TO |
|---|---|---|---|
| A3 | 00779 | C-63640 | – |

| SCALE | SHEET | REV |
|---|---|---|
| 6:1 | 1 OF 1 | B |