© – TE Connectivity. All Rights Reserved.

REVISIONS					
P	LTR	DESCRIPTION	DATE	DWN	APVD
	P1	REVISED PER ECN-22-150900	22APR2022	RK	CSD

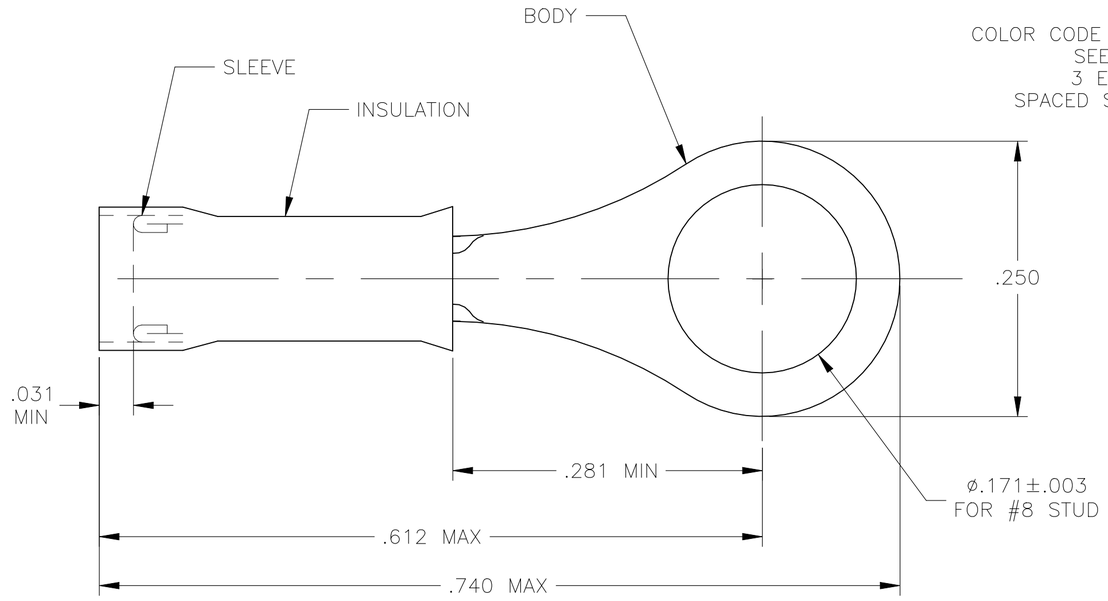

FIGURE 1

FOR .050 TO .082 WIRE INSULATION DIA

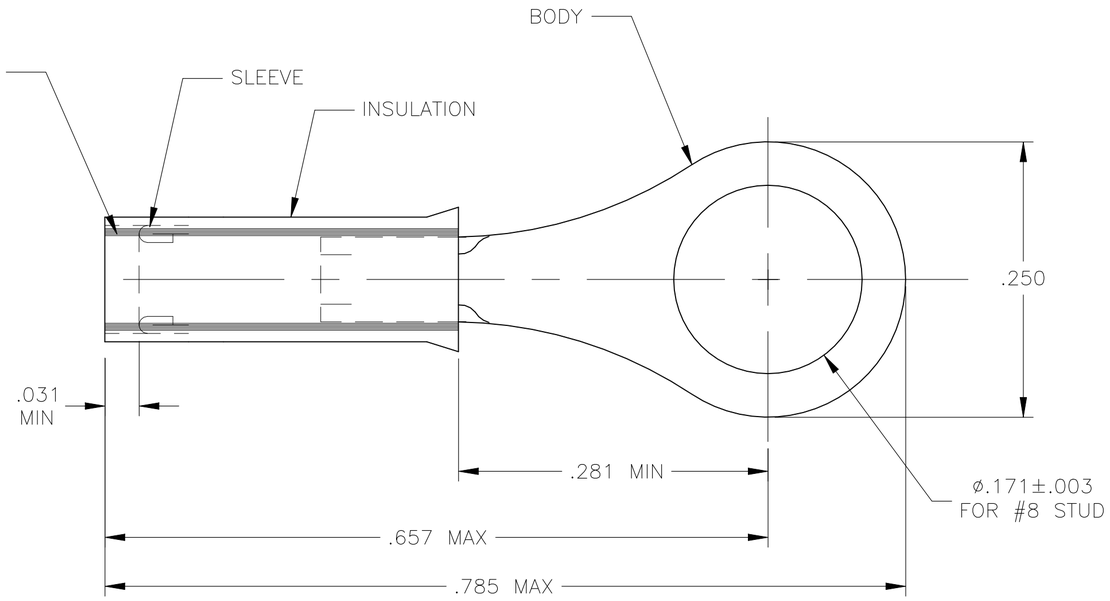

FIGURE 2
INSULATION RESTRICTING

FOR X/Y WIRE INSULATION DIA

1 TONGUE MATERIAL THK IS .018±.002.

2 NOTE DELETED

QTY	DESCRIPTION	MATERIAL & FINISH	PART NO
1	WIRE TERMINAL INSULATION RESTRICTING	BODY: COPPER (ASTM-B152) TIN PL (ASTM-B545) SLEEVE: COPPER (ASTM-B152) NICKEL PL. (QQ-N-290) INSULATION: NYLON COLOR: YELLOW (ASTM-D4066) TYPE 1	2-323916-3
100	LOOSE PC, BOX	BODY & SLEEVE: COPPER (ASTM-B152) TIN PL (ASTM-B545) INSULATION: NYLON COLOR: YELLOW (ASTM-D4066) TYPE 1	8-323916-1
4000	323916 ON TAPE		2-323916-1
1	WIRE TERMINAL		323916

PART NO.	STYLE	WIRE SIZE	STRIPE COLOR	"X/Y"	PART NO. ON TAPE
8-323916-1	FIGURE 1	#26-#22	NONE	–	–
2-323916-3	FIGURE 2	#24	BLUE	.031/.055	–
323916	FIGURE 1	#26-#22	NONE	–	2-323916-1

THIS DRAWING IS A CONTROLLED DOCUMENT.

DIMENSIONS: INCHES

TOLERANCES UNLESS OTHERWISE SPECIFIED:
0 PLC ± –
1 PLC ± –
2 PLC ± –
3 PLC ± .008
4 PLC ± –
ANGLES ± 5°

MATERIAL: SEE TABLE

FINISH: SEE TABLE

DWN JR RUTH 02OCT09
CHK TOM MICHIELUTTI 02OCT09
APVD MIKE PERCHERKE 02OCT09
PRODUCT SPEC –
APPLICATION SPEC –
WEIGHT –

TE Connectivity

NAME
TERMINAL, NYLON – PIDG – RING TONGUE
WIRE SIZE: 26-22
–

SIZE	CAGE CODE	DRAWING NO	RESTRICTED TO
A2	00779	C-323916	–

CUSTOMER DRAWING | SCALE 10:1 | SHEET 1 OF 1 | REV P1

323916