THIS DRAWING IS UNPUBLISHED. RELEASED FOR PUBLICATION –.– .
© COPYRIGHT – BY TYCO ELECTRONICS CORPORATION. ALL RIGHTS RESERVED.

LOC	DIST
GP	00

REVISIONS

P	LTR	DESCRIPTION	DATE	DWN	APVD
	C	REVISED PER ECO-08-019103	19AUG2008	ZMR	CWR

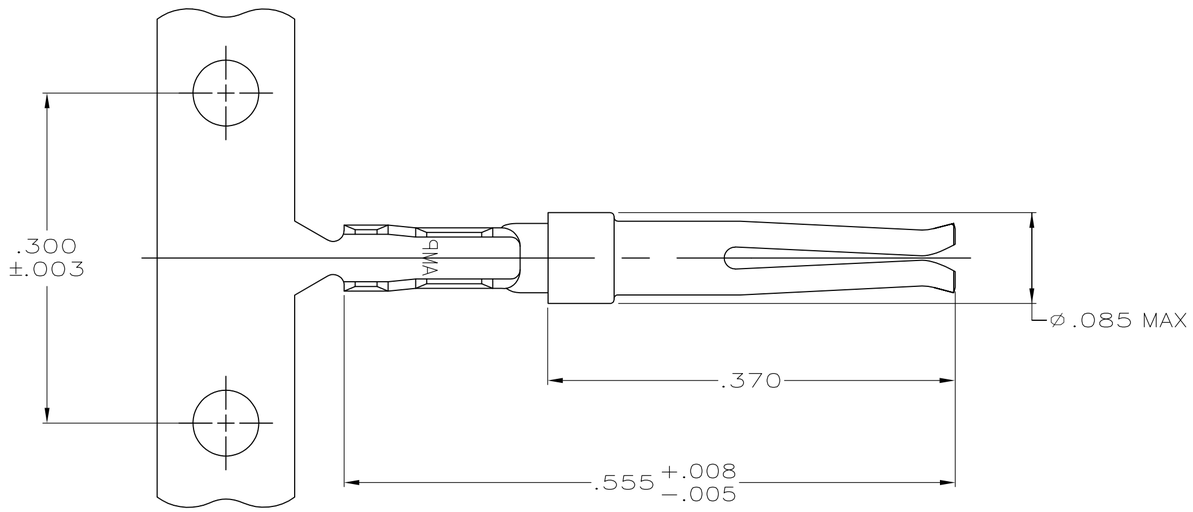

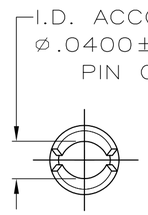

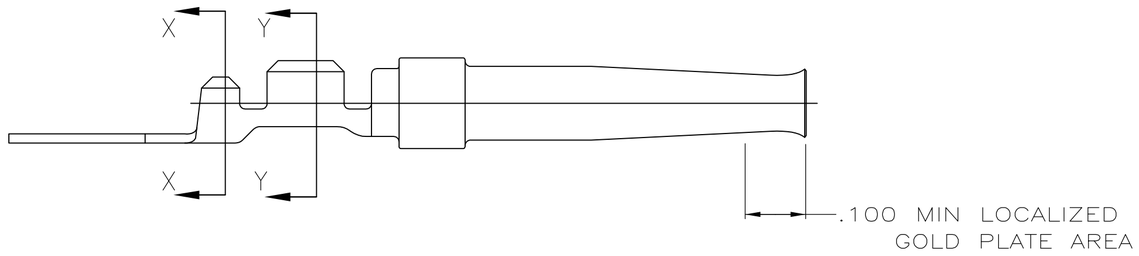

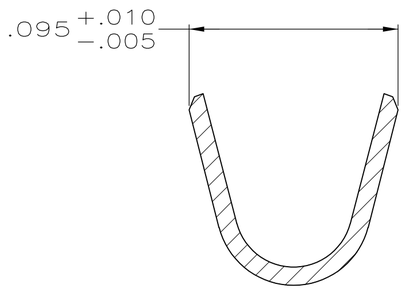

SECTION X–X
SCALE 20:1

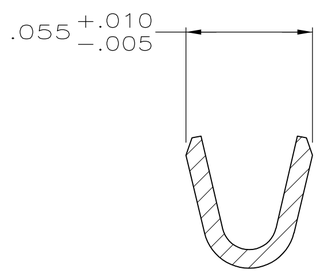

SECTION Y–Y
SCALE 20:1

1. PLATED WITH .000030 GOLD ON INSIDE OF LOCALIZED GOLD PLATE AREA, .000100 TIN ON CRIMP BARRELS, ALL OVER .000050 NICKEL UNDERPLATE.
   –OR–
   GOLD FLASH OVER PALLADIUM–NICKEL .000030 TOTAL ON INSIDE OF LOCALIZED GOLD PLATE AREA, .000100 TIN ON CRIMP BARRELS, ALL OVER .000050 NICKEL UNDERPLATE.
2. GOLD FLASH ON INSIDE OF LOCALIZED GOLD PLATE AREA, .000100 TIN PLATED CRIMP BARRELS, ALL OVER .000030 NICKEL UNDERPLATE.
3. CRIMP STRIP USING AMP MINI APPLICATOR.
4. CONTACT ACCEPTS WIRE RANGE OF 24–28 AWG AND INSULATION RANGE OF .050–.060.

1	1–5066683–0
2	5066683–7
FINISH	PART NUMBER

THIS DRAWING IS A CONTROLLED DOCUMENT.

DIMENSIONS: INCHES

TOLERANCES UNLESS OTHERWISE SPECIFIED:
0 PLC ± –
1 PLC ± –
2 PLC ± –
3 PLC ± .005
4 PLC ± –
ANGLES ± –

MATERIAL: PHOSPHOR BRONZE

FINISH: SEE TABLE

DWN G. ATTADIA – DOCK5 11–10–04
CHK J. GERACE 11–10–04
APVD M. WALMSLEY 11–10–04
PRODUCT SPEC 108–40005
APPLICATION SPEC 114–10000
WEIGHT –

CUSTOMER DRAWING

Tyco Electronics
Tyco Electronics Corporation
Harrisburg, PA 17105–3608

NAME: SOCKET CONTACT, SIZE 20 DF, AMPLIMITE
–

SIZE	CAGE CODE	DRAWING NO	RESTRICTED TO
A2	00779	C-5066683	–

SCALE	SHEET	REV
10:1	1 OF 1	C

5066683