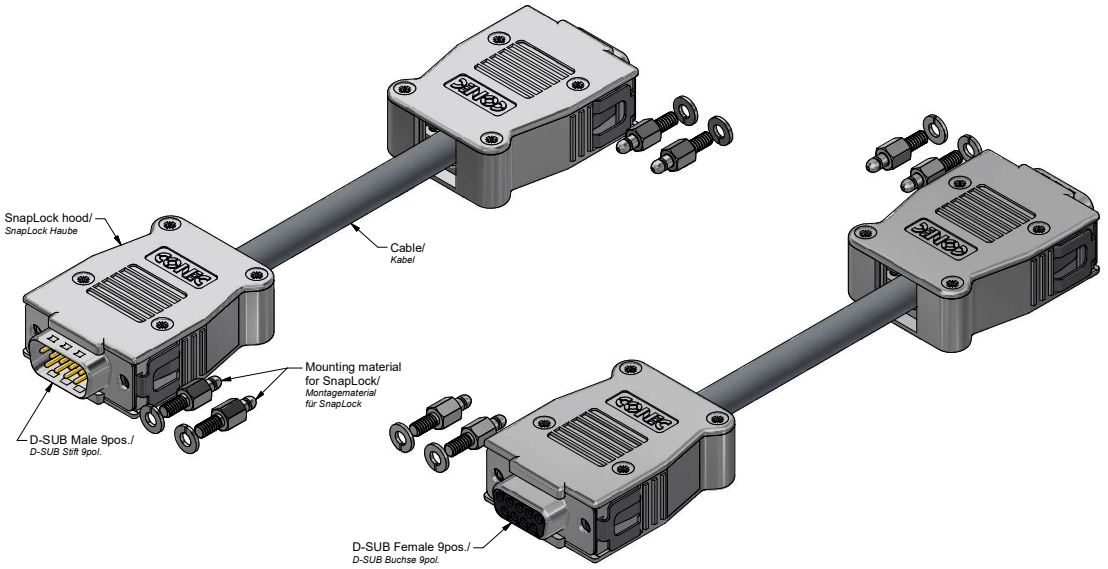

Materials SnapLock hood/
Werkstoffe SnapLock Haube:

Hood/ *Haube:*	ABS UL 94 V-0, Ni
Blanking plug/ *Blindstopfen:*	ABS UL 94 V-0, Ni
Cable strain relief/ *Zugentlastung:*	Steel, Ni
Clip/ *Clip:*	Stainless Steel/ *Edelstahl*
Countersunk-head screw/ *Linsenkopfschraube:*	Steel, Ni
Mounting material/ *Montagematerial:*	Steel, Ni

Materials D-SUB Male 9pos. + Female 9pos./
Werkstoffe D-SUB Stift 9pol. + Buchse 9pol.:

Insulator/ *Isolierkörper:*	PA 66 GF UL 94 V-0
Shell/ *Gehäuse:*	Steel, Sn over Ni
Crimp contact/ *Crimpkontakt:*	Copper alloy, Au over Ni

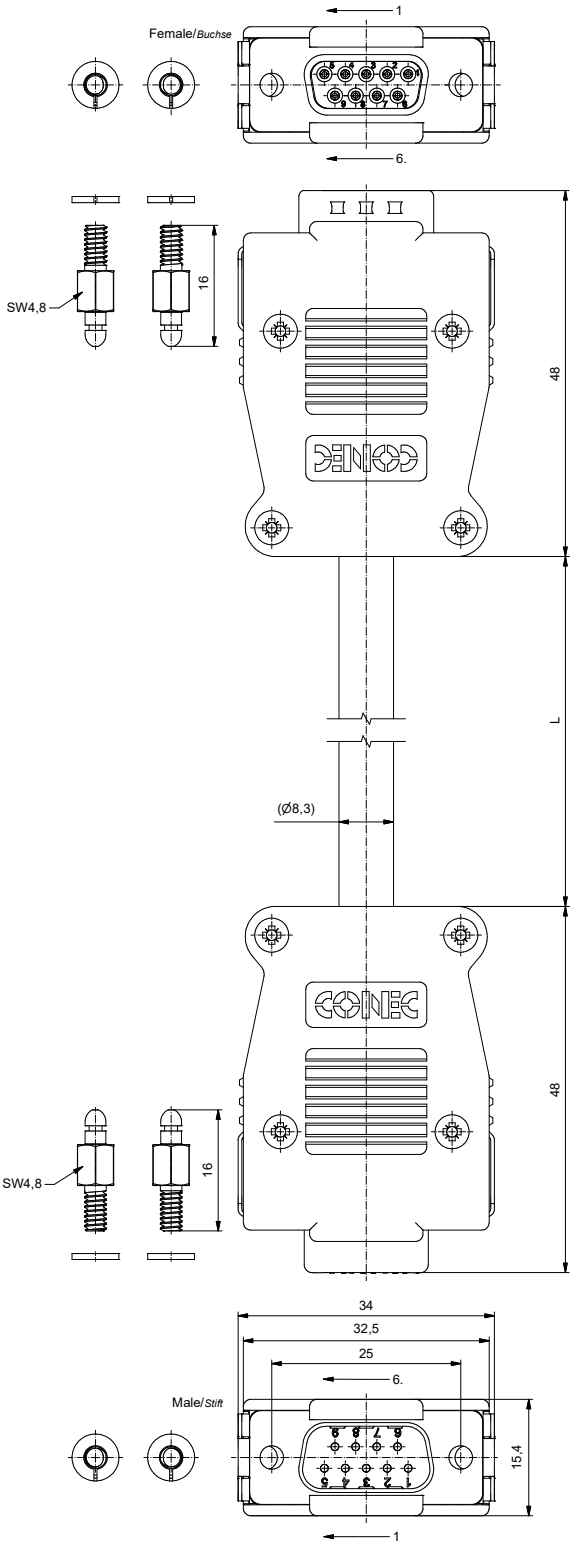

Contact assignment/
Kontaktbelegung:

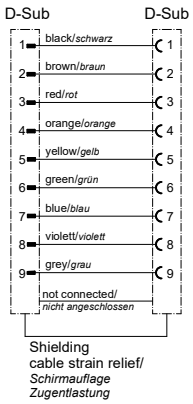

Part no/ *Art.-Nr.:*	Length L/ *Länge L:*	Cable/ *Kabel:*
16-512360	1,8 m	PVC, grey/*grau*, 10x0,34 mm², LiY-CY Cable/*Kabel*: 781-GN31000
16-512370	3 m	
16-512380	5 m	

tolerance of cable/ *Kabeltoleranz:*	L <= 4 m: L + 40 mm L > 4 m: L + 1 %	dim. in mm	D-Sub Male 9pol. + Female 9pos. in SnapLock hood with cable and mounting material *D-Sub Stift 9pol. + Buchse 9pol. in SnapLock Haube mit Kabel und Befestigungsmaterial*
general tolerance/ *Allgemeintoleranz:*	0 ± 0,50 mm 0,0 ± 0,25 mm 0,00 ± 0,10 mm ∢ ± 5°	Date/*Datum* / Name drawn/ *gez.* 26.11.2024 Lehmenkühler appd./ *gepr.* 27.11.2024 Koch	
Index: b 09.04.2025 JLE	scale/*Maßstab*: 2:1	Amphenol CONEC	dwg no / *Z.-nr.:* 16K1A4394 — DIN-A2 Customer specific product — 1 / 1

The reproduction, distribution and utilisation of this document as well as the communication of its contents to others without express authorisation is prohibited. Offenders will be held liable for the payment of damages. All rights reserved in the event of the grant of a patent, utility model or design.
The information in this document is valid for electronic use and for paper prints. Please observe the applicable revision.
We reserve the right to change specifications, dimensions, weight, materials, colors, shades and versions, insert cuts, applications, prints, Zusatzbelastungen und Farben zu Gebrauchszwecken.