1206 AS

Engineer's Kit: EK-1206AS-X

(Wire wound - open)

Chip Inductors for RF Applications

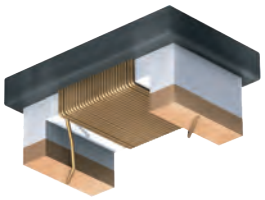

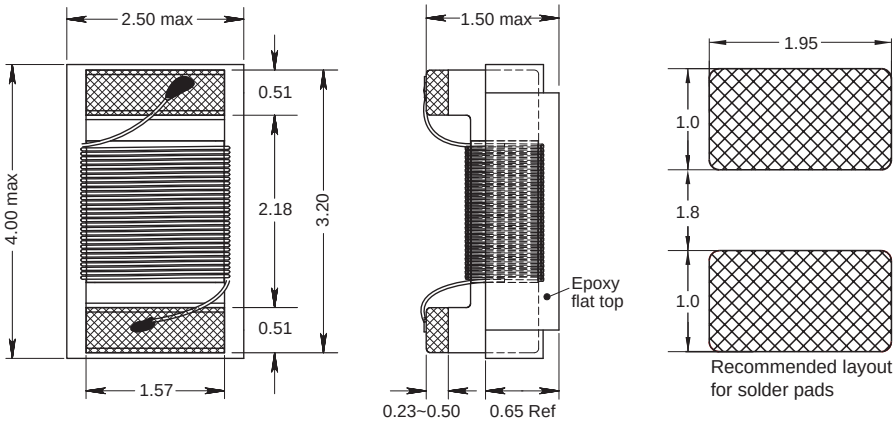

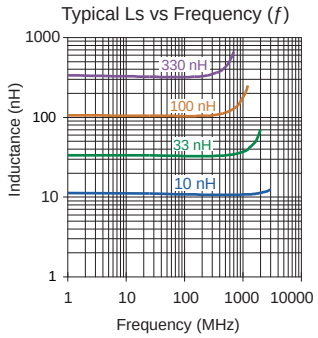

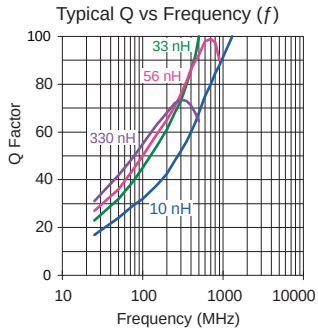

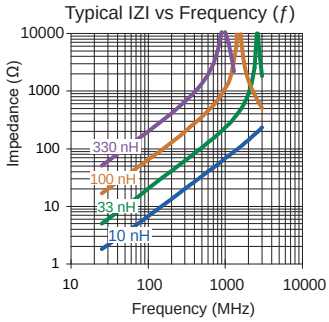

Single layer (typ)

Part No	Inductance L (nH)	f_L (MHz)	Tol ± (%)	Q min	f_Q (MHz)	SRF (MHz)	DCR max (Ω)	Rated DC Current max (mA)
1206AS-3N3M-YY	3.3	100	20	30	300	6000 min	0.05	1000
1206AS-6N8K-YY	6.8	100	10	37	300	5500 min	0.07	1000
1206AS-010J-YY	10	100	5	40	300	4000 min	0.08	1000
1206AS-012J-YY	12	100	5	51	300	3200 min	0.08	1000
1206AS-015J-YY	15	100	5	51	300	3200 min	0.10	1000
1206AS-018J-YY	18	100	5	51	300	2800 min	0.10	1000
1206AS-022J-YY	22	100	5	52	300	2200 min	0.10	1000
1206AS-027J-YY	27	100	5	52	300	1800 min	0.11	1000
1206AS-030J-YY	30	100	5	52	300	1800 min	0.11	1000
1206AS-033J-YY	33	100	5	56	300	1800 min	0.11	1000
1206AS-039J-YY	39	100	5	64	300	1800 min	0.12	1000
1206AS-047J-YY	47	100	5	64	300	1500 min	0.13	1000
1206AS-056J-YY	56	100	5	64	300	1450 min	0.14	1000
1206AS-068J-YY	68	100	5	61	300	1200 min	0.26	900
1206AS-082J-YY	82	100	5	66	300	1200 min	0.21	900
1206AS-R10J-YY	100	100	5	55	300	1100 min	0.26	850
1206AS-R12J-YY	120	100	5	75	300	1100 min	0.26	800
1206AS-R13J-YY	130	100	5	75	300	950 min	0.31	750
1206AS-R15J-YY	150	100	5	65	300	950 min	0.31	750
1206AS-R18J-YY	180	50	5	75	300	900 min	0.43	700
1206AS-R21J-YY	210	50	5	75	300	760 min	0.50	670
1206AS-R22J-YY	220	50	5	75	300	760 min	0.50	670
1206AS-R24J-YY	240	50	5	57	300	730 min	0.56	630
1206AS-R27J-YY	270	50	5	57	300	730 min	0.56	630
1206AS-R29J-YY	290	50	5	57	150	650 min	0.62	590
1206AS-R33J-YY	330	50	5	55	150	650 min	0.62	590
1206AS-R39J-YY	390	50	5	55	150	600 min	0.75	530
1206AS-R47J-YY	470	50	5	52	150	550 min	1.30	490
1206AS-R50K-YY	500	50	10	45	150	470 typ	1.30	460
1206AS-R56K-YY	560	50	10	45	150	470 typ	1.34	460
1206AS-R68K-YY	680	35	10	45	150	450 typ	1.58	430
1206AS-R82K-YY	820	35	10	45	150	420 typ	1.82	400
1206AS-R91K-YY	910	35	10	45	150	416 typ	1.87	300
1206AS-1R0K-YY	1000	35	10	45	150	400 typ	2.80	320
1206AS-1R2K-YY	1200	35	10	45	150	380 typ	3.20	300
1206AS-2R2K-YY	2200	35	10	32	150	160 typ	4.50	280
1206AS-2R7K-YY	2700	35	10	25	50	160 typ	5.50	145
1206AS-3R3K-YY	3300	35	10	20	50	140 typ	6.50	130
1206AS-4R7K-YY	4700	35	10	20	50	120 typ	7.20	120

Core Material: Ceramic

Revision date: 05 Jan 2023

SPQ: Taped / Reel 1000 [-08]
2000 [-01]
7500 [-04]

Remarks: - Unlisted inductance values available upon request.
- 2% and 5% tolerance available upon request.

● All dimensions in mm