1812 AF

Engineer's Kit: EK-1812AF-X

125°C AEC-Q200 | RoHS Halogen Free | Mechanical Shock Vibration Proof

Chip Inductors for RF Applications

(Wire wound - open)

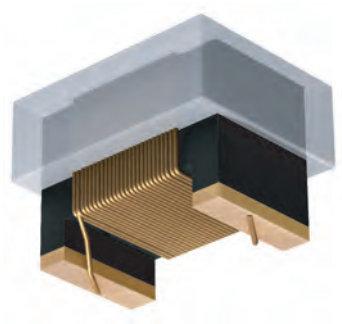

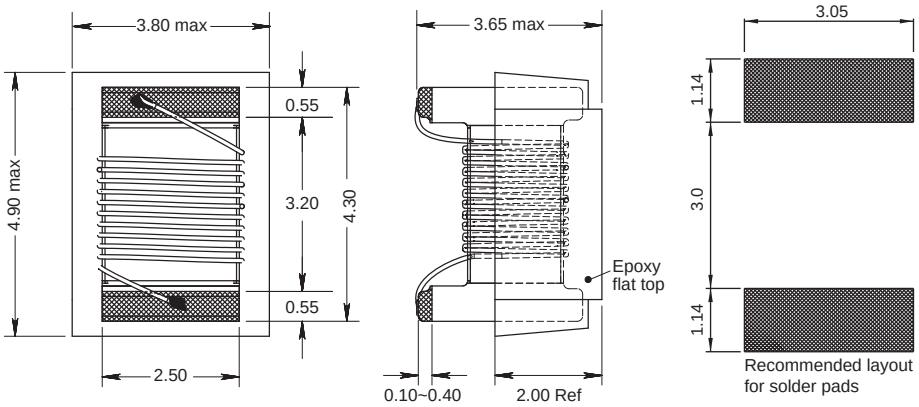

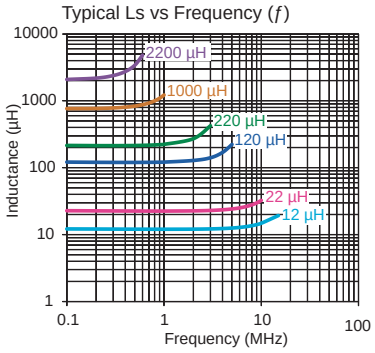

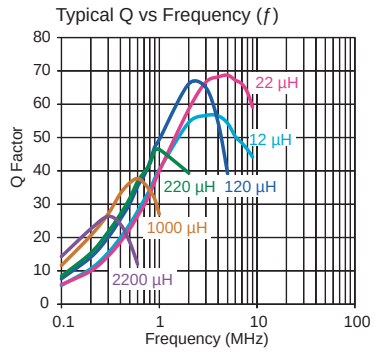

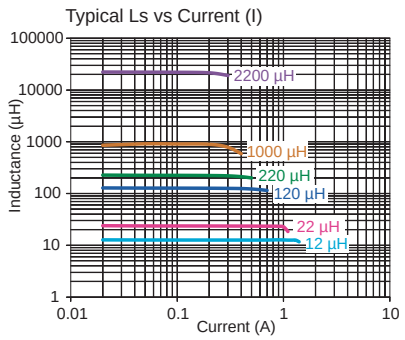

Part No	Inductance L (µH)	f_L (MHz)	Tol ± (%)	Q min	f_Q (MHz)	SRF (MHz)	DCR max (Ω)	Rated DC Current (mA)
1812AF-3R9K-YY	3.9	2.5	10	30	2.5	145 min	0.59	410
1812AF-100K-YY	10	2.5	10	42	2.5	23 typ	1.8	310
1812AF-120K-YY	12	2.5	10	42	2.5	40 typ	2.0	310
1812AF-150K-YY	15	2.5	10	42	2.5	40 typ	2.5	290
1812AF-180K-YY	18	2.5	10	45	2.5	40 typ	2.8	270
1812AF-220K-YY	22	2.5	10	45	2.5	40 typ	3.2	260
1812AF-270K-YY	27	2.5	10	45	2.5	36 typ	3.6	240
1812AF-330K-YY	33	2.5	10	45	2.5	34 typ	4.0	230
1812AF-390K-YY	39	2.5	10	45	2.5	32 typ	4.5	210
1812AF-470K-YY	47	2.5	10	42	2.5	30 typ	5.0	200
1812AF-560K-YY	56	2.5	10	42	2.5	27 typ	5.5	190
1812AF-680K-YY	68	2.5	10	40	2.5	23 typ	6.0	180
1812AF-820K-YY	82	2.5	10	40	2.5	19 typ	7.0	170
1812AF-101K-YY	100	2.5	10	40	2.5	13 typ	8.0	150
1812AF-121K-YY	120	0.79	10	33	0.79	11 typ	11.5	135
1812AF-151K-YY	150	0.79	10	36	0.79	10 typ	13.0	125
1812AF-181K-YY	180	0.79	10	36	0.79	9.0 typ	14.2	120
1812AF-221K-YY	220	0.79	10	38	0.79	6.0 typ	16.2	115
1812AF-271K-YY	270	0.79	10	38	0.79	4.5 typ	20.5	105
1812AF-331K-YY	330	0.79	10	38	0.79	3.5 typ	22.5	100
1812AF-391K-YY	390	0.79	10	38	0.79	3.0 typ	24.5	90
1812AF-471K-YY	470	0.79	10	33	0.79	2.1 typ	26.5	85
1812AF-561K-YY	560	0.79	10	33	0.79	2.0 typ	28.5	75
1812AF-681K-YY	680	0.79	10	27	0.79	1.8 typ	38.0	60
1812AF-821K-YY	820	0.79	10	27	0.79	1.7 typ	41.0	55
1812AF-102K-YY	1000	0.79	10	26	0.79	1.6 typ	44.0	50
1812AF-122K-YY	1200	0.252	10	18	0.252	0.8 typ	60.0	42
1812AF-222K-YY	2200	0.252	10	18	0.252	0.62 typ	84.0	32

Core Material: Ceramic & Ferrite

Revision date: 11 Jan 2022

SPQ: Taped / Reel 600 [-01]
2200 [-04]

Remarks: - Unlisted inductance values available upon request.
- 2% and 5% tolerance available upon request.

● All dimensions in mm