1812 AS

Engineer's Kit: EK-1812AS-X

125°C AEC-Q200 | RoHS Halogen Free | Mechanical Shock Vibration Proof | High Q Values

(Wire wound - open)

Chip Inductors for RF Applications

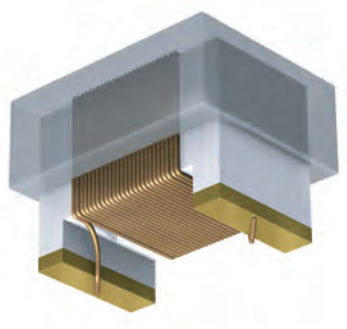

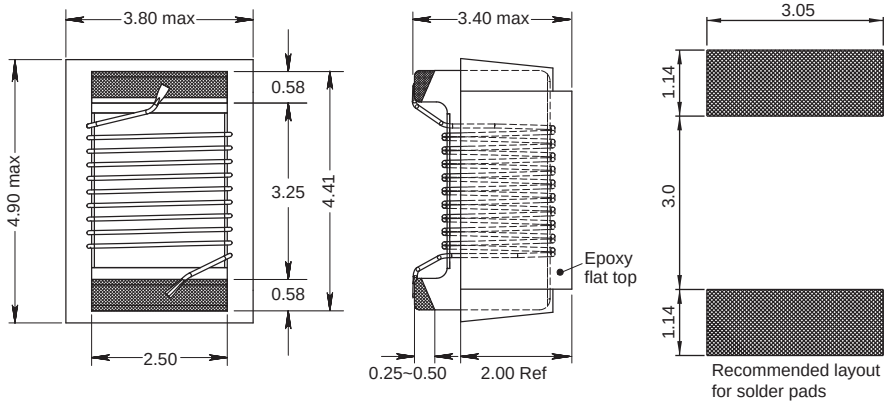

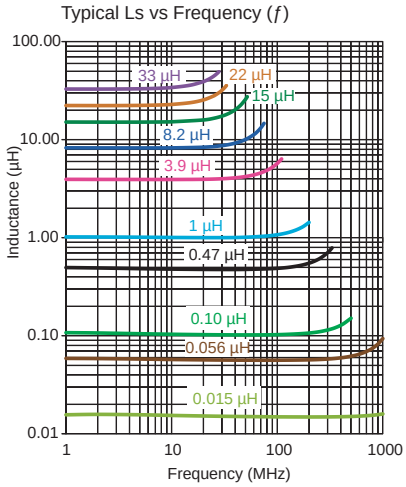

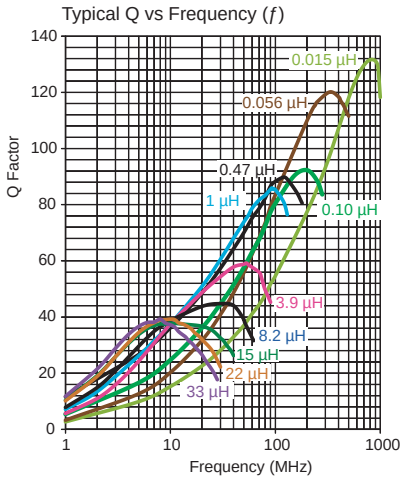

Single layer (typ)

Part No	Inductance L (µH)	f_L (MHz)	Tol ± (%)	Q min	f_Q (MHz)	SRF (MHz)	DCR max (Ω)	Rated DC Current max (mA)
1812AS-015K-YY	0.015	50	10	70	500	2400 min	0.035	1550
1812AS-022K-YY	0.022	50	10	70	500	2300 min	0.050	1550
1812AS-033K-YY	0.033	50	10	70	500	1850 min	0.060	1500
1812AS-047K-YY	0.047	50	10	70	250	1100 min	0.060	1500
1812AS-056K-YY	0.056	50	10	70	250	900 min	0.070	1350
1812AS-068K-YY	0.068	50	10	70	250	900 min	0.070	1350
1812AS-082K-YY	0.082	50	10	70	250	900 min	0.080	1300
1812AS-R10K-YY	0.10	50	10	70	250	650 min	0.080	1300
1812AS-R12K-YY	0.12	50	10	70	100	650 min	0.10	1050
1812AS-R15K-YY	0.15	50	10	68	100	600 min	0.13	1000
1812AS-R22K-YY	0.22	50	10	68	100	600 min	0.17	800
1812AS-R27K-YY	0.27	50	10	68	100	500 min	0.19	800
1812AS-R33K-YY	0.33	50	10	64	100	400 min	0.20	700
1812AS-R37K-YY	0.37	50	10	64	100	400 min	0.22	650
1812AS-R47K-YY	0.47	50	10	64	100	400 min	0.30	500
1812AS-1R0K-YY	1.0	7.9	10	62	50	277 min	1.20	480
1812AS-1R2K-YY	1.2	7.9	10	60	50	240 min	1.20	480
1812AS-1R5K-YY	1.5	7.9	10	60	50	220 min	1.60	430
1812AS-1R8K-YY	1.8	7.9	10	60	50	200 min	2.00	380
1812AS-2R2K-YY	2.2	7.9	10	63	50	180 min	2.20	340
1812AS-2R7K-YY	2.7	7.9	10	63	50	160 min	3.20	300
1812AS-3R3K-YY	3.3	7.9	10	50	50	145 typ	3.80	270
1812AS-3R9K-YY	3.9	7.9	10	50	50	130 typ	5.00	240
1812AS-4R7K-YY	4.7	7.9	10	50	50	120 typ	5.40	230
1812AS-5R6K-YY	5.6	7.9	10	40	50	105 typ	5.70	220
1812AS-6R8K-YY	6.8	7.9	10	40	50	103 typ	6.60	210
1812AS-8R2K-YY	8.2	7.9	10	38	50	94 typ	7.00	200
1812AS-100K-YY	10	7.9	10	38	50	80 typ	7.70	190
1812AS-120K-YY	12	2.5	10	38	10	74 typ	8.70	180
1812AS-150K-YY	15	2.5	10	37	10	59 typ	9.60	170
1812AS-180K-YY	18	2.5	10	36	10	59 typ	10.5	160
1812AS-220K-YY	22	2.5	10	36	10	45 typ	13.0	155
1812AS-270K-YY	27	2.5	10	36	10	35 typ	14.0	150
1812AS-330K-YY	33	2.5	10	36	10	35 typ	16.5	145
1812AS-390K-YY	39	2.5	10	32	10	25 typ	23.5	80
1812AS-470K-YY	47	2.5	10	32	10	20 typ	39.0	80
1812AS-560K-YY	56	2.5	10	32	10	20 typ	41.0	60
1812AS-680K-YY	68	2.5	10	32	10	18 typ	54.0	58
1812AS-820K-YY	82	2.5	10	32	10	15 typ	59.0	55

Core Material: Ceramic

Revision date: 11 Jan 2022

SPQ: Taped / Reel 600 [-01]
2200 [-04]

Remarks: - Unlisted inductance values available upon request.
- 2% and 5% tolerance available upon request.

● All dimensions in mm