VX

8106.760
8108.760

8x	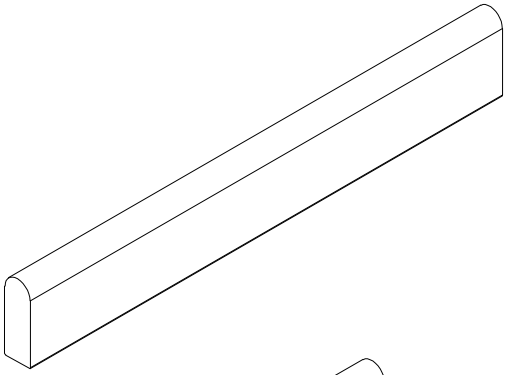	879 mm
4x	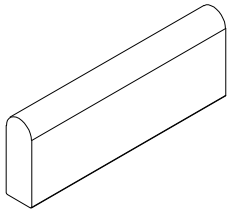	741 mm
8x	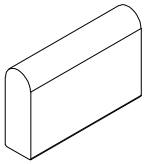	50 mm

Zchng.-Nr. / No. of dwg. :A09031501VX Versandbeutel-Nr. / No. of accessory bag :	Lieferanten-Nr. / No. of supplier :

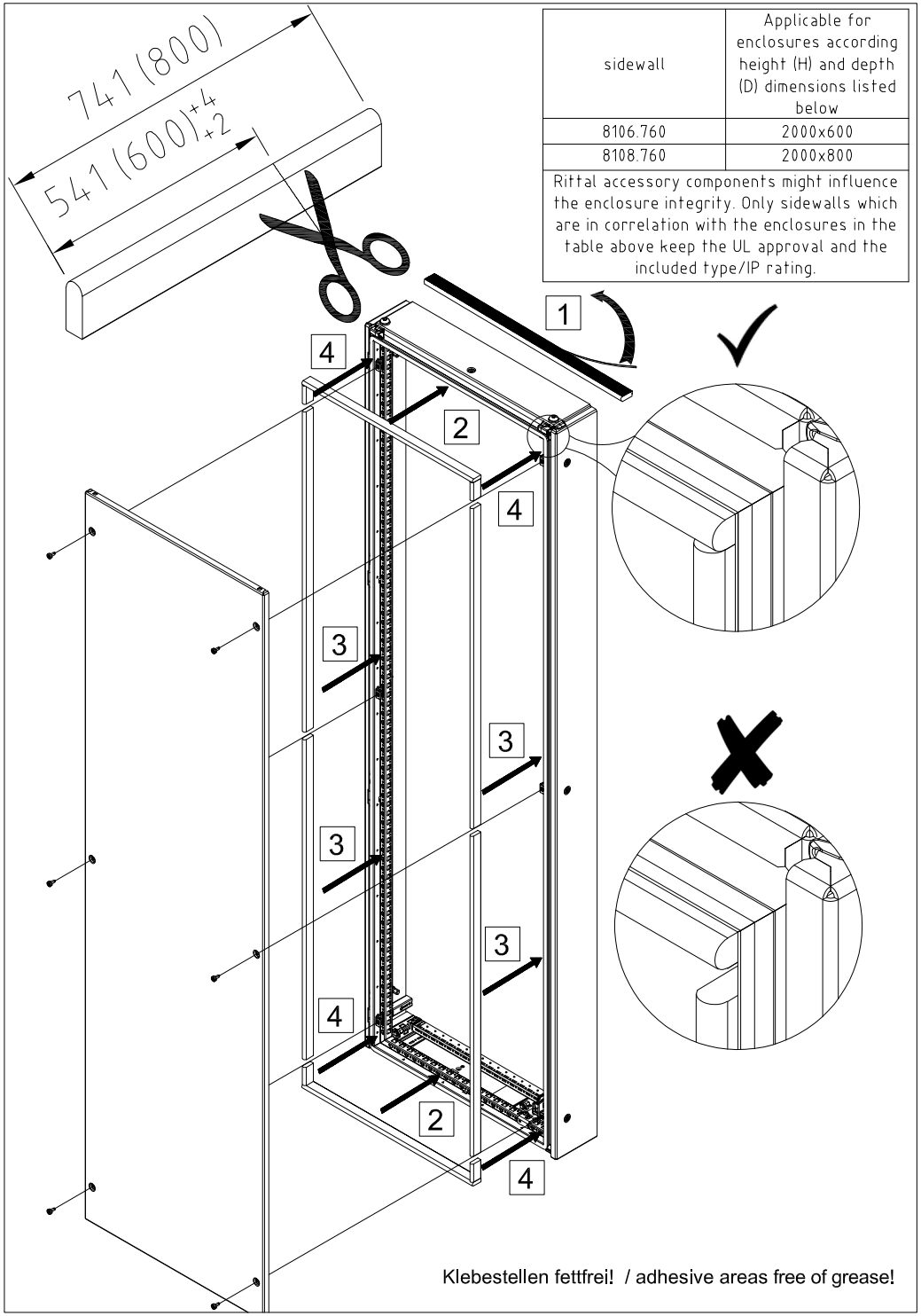

sidewall	Applicable for enclosures according height (H) and depth (D) dimensions listed below
8106.760	2000x600
8108.760	2000x800

Rittal accessory components might influence the enclosure integrity. Only sidewalls which are in correlation with the enclosures in the table above keep the UL approval and the included type/IP rating.

Klebestellen fettfrei! / adhesive areas free of grease!