3.14.100.542/0000

RF 15 R, Silber, nieder Punktausleuchtung 1LED, 2,9 ± 0,6 N, Leuchtmittel grün, 1 S



Beschreibung

Die Kurzhubtaster RF 15 R Silber haben eine Kantenlänge von 15 x 15 mm, schaltsichere Silberkontakte und einen deutlichen Tastenklick. Ihr Einsatzgebiet sind Flacheingabetastauren unter Dekorfolie bzw. unter Tastenkappen, wie z.B. RAFI Tastenkappen RK 90.

Das runde Druckstück des RF 15 R benötigt runde Durchbrüche in der Frontplatte. Diese ermöglichen ein enges Tastaturraster von nur 15,24 mm mit ausreichend großen Klebestegen zwischen den einzelnen Tastern. Auf diesen kann die Dekorfolie aufgeklebt werden, für die wir eine Hochprägung über den Tasten empfehlen.

CE

Technische Daten

Allgemein

Farbe des Leuchtmittels	grün
Arbeitstemperatur, min.	-25 °C
Arbeitstemperatur, max.	70 °C
Lagertemperatur, min.	-25 °C
Lagertemperatur, max.	70 °C
beleuchtbar	ja
Leuchtmittel	Punktausleuchtung 1 LED
Lötdauer Handlöten, max.	5 Sek
Löttemperatur Handlöten	350 °C
Löttemperatur Wellenlöten	260 °C
Lötverfahren	Hand / Welle
Lötwärmebeständigkeit nach Norm	DIN EN 60068-2-20
Verpackung	Schiene
Verpackungseinheit	32 Stück
Nettogewicht	2,1 g
Lebensdauer	1.000.000 Zyklen
B10	1.300.000 Zyklen
Mindestbestellmenge (MOQ)	32 Stück
RoHS konform	ja
REACH konform	ja
Ursprungsland	HU

Einbaumaße

Außenmaß Länge	15 mm
Außenmaß Breite	15 mm
Außenmaß Höhe	9,7 mm

Direkte Links

RAFI eCatalog

The information in this data sheet only contains general descriptions and / or performance features, which may not apply precisely as described to the respective application, and which may change due to further product enhancements. The technical data, illustrations and other information about our products are the mere results of individual technical testing. These descriptions and other product features are only binding if they expressly agreed upon at the time of the conclusion of a binding contract. In all other cases, we reserve the right to make technical changes as well as changes of availability. Pictures and other graphic illustrations are approximations only. All product names may be trademarks or brand names of the RAFI Group or any other sub-supplier of RAFI. The use of such by any third parties for their own purposes may infringe the rights of the respective entity holding those rights.

RAFI GmbH & Co. KG

Ravensburger Str. 128-134
88276 Berg / Ravensburg
Germany
www.rafi-group.com,
info.headquarters@rafi-group.com

Einbauhöhe	9,7 mm
Raster, min.	15.24 mm

Mechanische Kennwerte

Anschluss rückseitig	THT
Befestigung	Löten
Betätigungsfunktion	tastend
Betätigungskraft, min.	2,9 ± 0.6 N
Kontaktfunktion	1 S
Kontaktsystem	Sprungkontakt
Kontaktwerkstoff	Silber
Lötbarkeit	Ja
Schaltweg	0,5 + 0.3 mm

Elektrische Kennwerte

Betriebsspannung des Leuchtmittel, min.	2 V
Betriebsspannung des Leuchtmittel, max.	5 V
Schaltspannung, min.	3 V
Schaltspannung, max.	35 V
Betriebsstrom des Leuchtmittel, max.	30 mA
Schaltstrom, min.	0,0001 A
Schaltstrom, max.	0,25 A
Schaltleistung, max.	12,5 W
Vorwiderstand	nein

The information in this data sheet only contains general descriptions and / or performance features, which may not apply precisely as described to the respective application, and which may change due to further product enhancements. The technical data, illustrations and other information about our products are the mere results of individual technical testing. These descriptions and other product features are only binding if they expressly agreed upon at the time of the conclusion of a binding contract. In all other cases, we reserve the right to make technical changes as well as changes of availability. Pictures and other graphic illustrations are approximations only. All product names may be trademarks or brand names of the RAFI Group or any other sub-supplier of RAFI. The use of such by any third parties for their own purposes may infringe the rights of the respective entity holding those rights.

RAFI GmbH & Co. KG

Ravensburger Str. 128-134
88276 Berg / Ravensburg
Germany
www.rafi-group.com,
info.headquarters@rafi-group.com

Zeichnungen

Maß-Zeichnungen

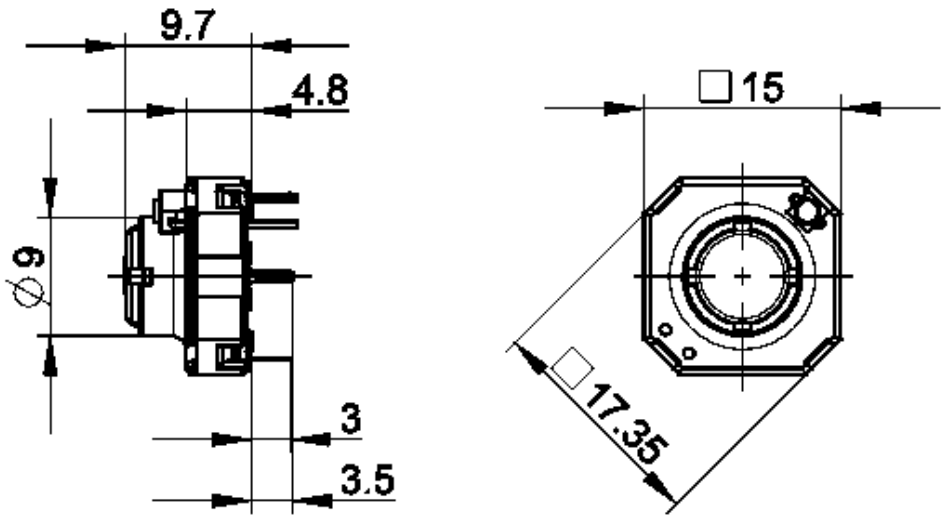

Leiterplatten-Zeichnung

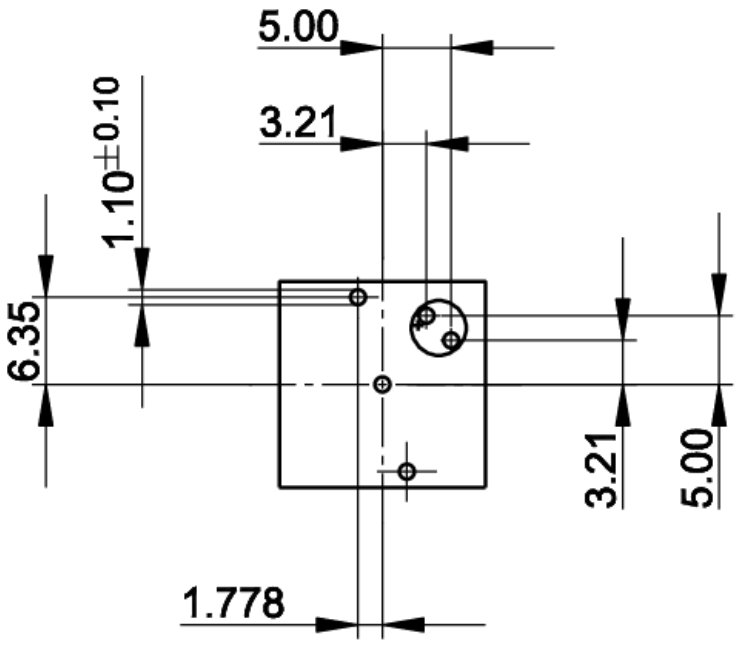

Taste mit 1x Punktausleuchtung

The information in this data sheet only contains general descriptions and / or performance features, which may not apply precisely as described to the respective application, and which may change due to further product enhancements. The technical data, illustrations and other information about our products are the mere results of individual technical testing. These descriptions and other product features are only binding if they expressly agreed upon at the time of the conclusion of a binding contract. In all other cases, we reserve the right to make technical changes as well as changes of availability. Pictures and other graphic illustrations are approximations only. All product names may be trademarks or brand names of the RAFI Group or any other sub-supplier of RAFI. The use of such by any third parties for their own purposes may infringe the rights of the respective entity holding those rights.

RAFI GmbH & Co. KG

Ravensburger Str. 128-134
88276 Berg / Ravensburg
Germany
www.rafi-group.com,
info.headquarters@rafi-group.com

Frontplatten-Zeichnung

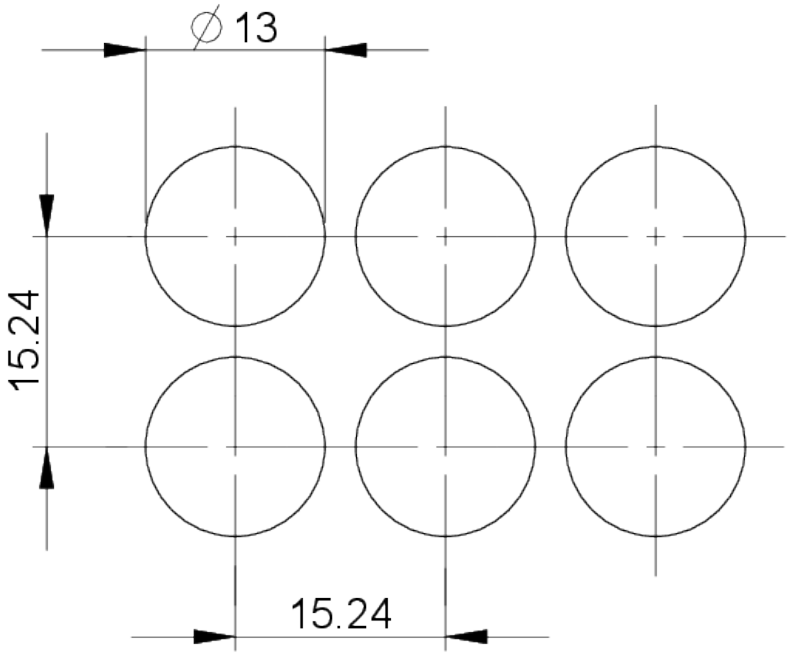

Frontplatten-Zeichnung

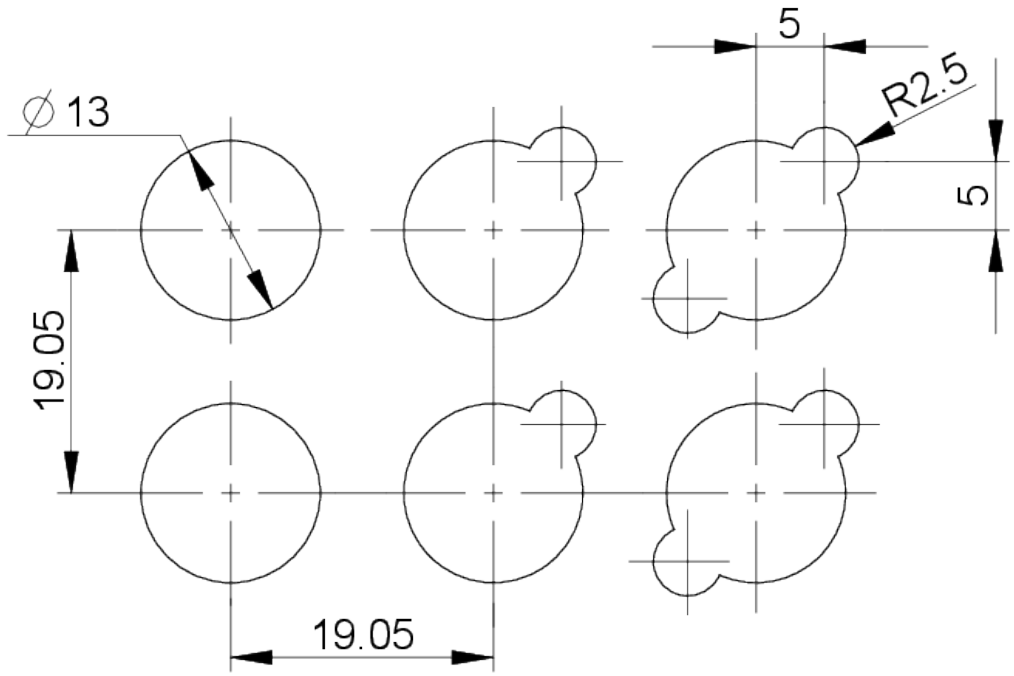

The information in this data sheet only contains general descriptions and / or performance features, which may not apply precisely as described to the respective application, and which may change due to further product enhancements. The technical data, illustrations and other information about our products are the mere results of individual technical testing. These descriptions and other product features are only binding if they expressly agreed upon at the time of the conclusion of a binding contract. In all other cases, we reserve the right to make technical changes as well as changes of availability. Pictures and other graphic illustrations are approximations only. All product names may be trademarks or brand names of the RAFI Group or any other sub-supplier of RAFI. The use of such by any third parties for their own purposes may infringe the rights of the respective entity holding those rights.

RAFI GmbH & Co. KG

Ravensburger Str. 128-134
88276 Berg / Ravensburg
Germany
www.rafi-group.com,
info.headquarters@rafi-group.com