5.55.103.031/1013

Tastenkappen-Körper, transparent, 20,7 mm x 17,2 mm

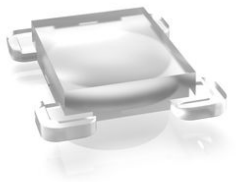

Beschreibung

Technische Daten

Allgemein

Farbe	transparent
beleuchtbar	ja
Verpackungseinheit	10 Stück
Nettogewicht	1 g
Mindestbestellmenge (MOQ)	500 Stück
RoHS konform	ja
REACH konform	ja
Material der Komponente	Kunststoff
Ursprungsland	DE

Einbaumaße

Außenmaß Länge	20,7 mm
Außenmaß Breite	17,2 mm
Außenmaß Höhe	4,45 mm

Direkte Links

RAFI eCatalog

The information in this data sheet only contains general descriptions and / or performance features, which may not apply precisely as described to the respective application, and which may change due to further product enhancements. The technical data, illustrations and other information about our products are the mere results of individual technical testing. These descriptions and other product features are only binding if they expressly agreed upon at the time of the conclusion of a binding contract. In all other cases, we reserve the right to make technical changes as well as changes of availability. Pictures and other graphic illustrations are approximations only. All product names may be trademarks or brand names of the RAFI Group or any other sub-supplier of RAFI. The use of such by any third parties for their own purposes may infringe the rights of the respective entity holding those rights.

RAFI GmbH & Co. KG

Ravensburger Str. 128-134
88276 Berg / Ravensburg
Germany
www.rafi-group.com,
info.headquarters@rafi-group.com

Zeichnungen

Maß-Zeichnungen

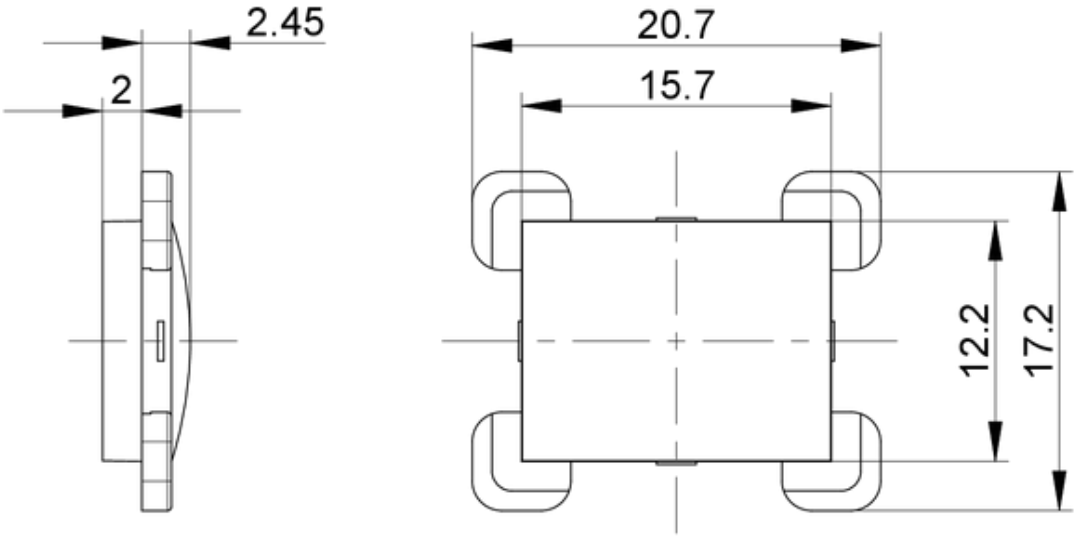

System-Zeichnung

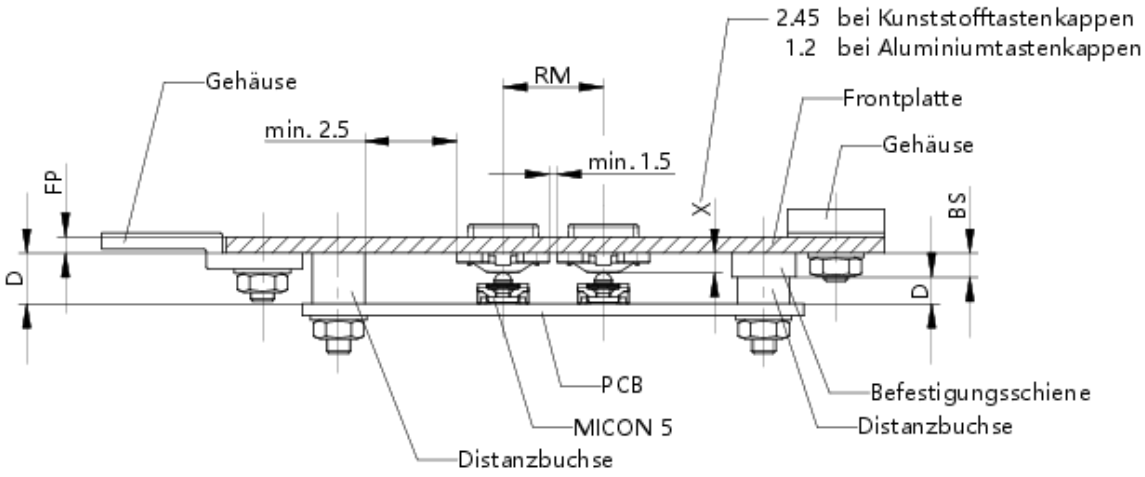

The information in this data sheet only contains general descriptions and / or performance features, which may not apply precisely as described to the respective application, and which may change due to further product enhancements. The technical data, illustrations and other information about our products are the mere results of individual technical testing. These descriptions and other product features are only binding if they expressly agreed upon at the time of the conclusion of a binding contract. In all other cases, we reserve the right to make technical changes as well as changes of availability. Pictures and other graphic illustrations are approximations only. All product names may be trademarks or brand names of the RAFI Group or any other sub-supplier of RAFI. The use of such by any third parties for their own purposes may infringe the rights of the respective entity holding those rights.

RAFI GmbH & Co. KG

Ravensburger Str. 128-134
88276 Berg / Ravensburg
Germany
www.rafi-group.com,
info.headquarters@rafi-group.com