# Basiselement - MCV 1,5/ 7-GF-3,5 - 1843279

Please be informed that the data shown in this PDF Document is generated from our Online Catalog. Please find the complete data in the user's documentation. Our General Terms of Use for Downloads are valid (http://download.phoenixcontact.com)



De afbeelding toont een 10-polige variant van het artikel

basiselement, nominale stroom: 8 A, nominale spanning (III/2): 160 V, aantal polen: 7, rastermaat: 3,5 mm, kleur: groen, contactoppervlak: tin, montage: solderen

## Product Features

- varianten met vergrendelingsnokken voor het vergrendelen van connectoren met vergrendelingsflens
- basiselementen met geringe bouwhoogte en compacte rasters

## Key commercial data

| | |
|---|---|
| **package_quantity** | 100 |
| **GTIN** | 4017918112462 |

## Technical data

### Afmetingen

| | |
|---|---|
| **lengte** | 7,25 mm |
| **rastermaat** | 3,5 mm |
| **afm. a** | 21 mm |
| **stiftafmetingen** | 0,8 x 0,8 mm |
| **printgatdiameter** | 1,2 mm |

### Algemeen

| | |
|---|---|
| **artikelfamilie** | MCV 1,5/..-GF |
| **isolatiemateriaalgroep** | IIIa |
| **teststootspanning (III/3)** | 2,5 kV |
| **teststootspanning (III/2)** | 2,5 kV |
| **teststootspanning (II/2)** | 2,5 kV |
| **nominale spanning (III/3)** | 160 V |
| **nominale spanning (III/2)** | 160 V |
| **nominale spanning (II/2)** | 250 V |
| **aansluiting overeenkomstig norm** | EN-VDE |
| **nominale stroom $I_N$** | 8 A |
| **belastingsstroom maximaal** | 8 A |
| **isolatiemateriaal** | PBT |
| **brandbaarheidsklasse volgens UL 94** | V0 |
| **Kleur** | groen |

# Basiselement - MCV 1,5/ 7-GF-3,5 - 1843279

## Technical data

### Algemeen

| | |
|---|---|
| **aantal polen** | 7 |

## classifications

### eCl@ss

| | |
|---|---|
| **eCl@ss 4.0** | 272607xx |
| **eCl@ss 4.1** | 27260701 |
| **eCl@ss 5.0** | 27260701 |
| **eCl@ss 5.1** | 27260701 |
| **eCl@ss 6.0** | 27260704 |
| **eCl@ss 7.0** | 27440402 |
| **eCl@ss 8.0** | 27440402 |

### ETIM

| | |
|---|---|
| **ETIM 3.0** | EC001121 |
| **ETIM 4.0** | EC002637 |
| **ETIM 5.0** | EC002637 |

### UNSPSC

| | |
|---|---|
| **UNSPSC 6.01** | 30211810 |
| **UNSPSC 7.0901** | 39121409 |
| **UNSPSC 11** | 39121409 |
| **UNSPSC 12.01** | 39121409 |
| **UNSPSC 13.2** | 39121409 |

## approvals

CSA / UL Recognized / VDE Gutachten mit Fertigungsüberwachung / cUL Recognized / GOST / IECEE CB Scheme / GOST / CCA / cULus Recognized /

### Approval details

**CSA**

| Usegroups | B | D |
|---|---|---|
| nominale spanning UN | 300 V | 300 V |
| nominale stroom IN | 8 A | 8 A |
| mm²/AWG/kcmil | | |

**UL Recognized**

# Basiselement - MCV 1,5/ 7-GF-3,5 - 1843279

## approvals

| Usegroups | B | D |
|---|---|---|
| nominale spanning UN | 300 V | 300 V |
| nominale stroom IN | 8 A | 8 A |
| mm²/AWG/kcmil | | |

**VDE Gutachten mit Fertigungsüberwachung**

| | |
|---|---|
| nominale spanning UN | 160 V |
| nominale stroom IN | 8 A |
| mm²/AWG/kcmil | |

**cUL Recognized**

| Usegroups | B | D |
|---|---|---|
| nominale spanning UN | 300 V | 300 V |
| nominale stroom IN | 8 A | 8 A |
| mm²/AWG/kcmil | | |

**GOST**

**IECEE CB Scheme**

| | |
|---|---|
| nominale spanning UN | 160 V |
| nominale stroom IN | 8 A |
| mm²/AWG/kcmil | |

**CCA**

| | |
|---|---|
| nominale spanning UN | 160 V |
| nominale stroom IN | 8 A |
| mm²/AWG/kcmil | |

# Basiselement - MCV 1,5/ 7-GF-3,5 - 1843279

## approvals

cULus Recognized

## accessories

**klemmencodering gecodeerd**

SK 3,5/2,8:FORTL.ZAHLEN - 0804073



**Polarisatie-element**

CP-MSTB - 1734634



## Drawings

# Basiselement - MCV 1,5/ 7-GF-3,5 - 1843279

Boorsjabloon

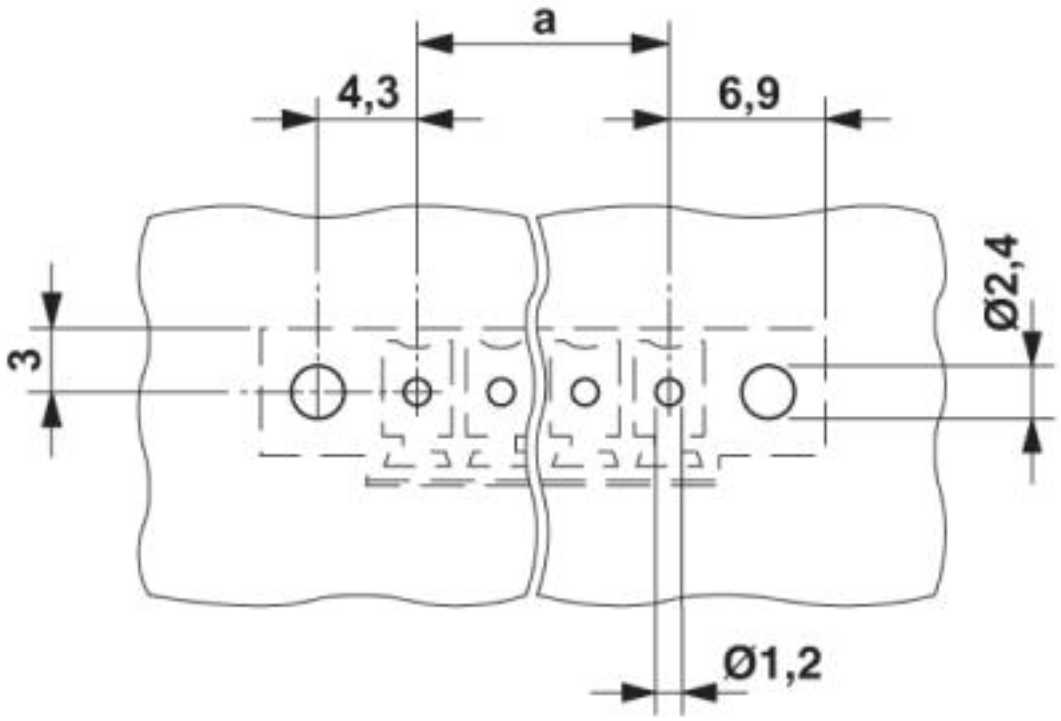


diagram

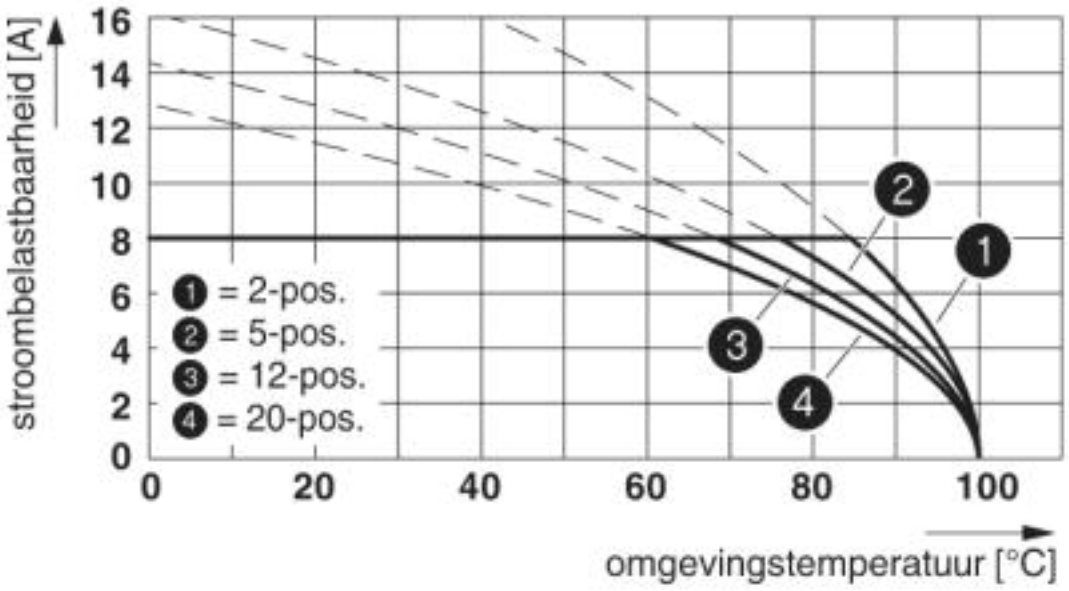

# Basiselement - MCV 1,5/ 7-GF-3,5 - 1843279

Maatschets

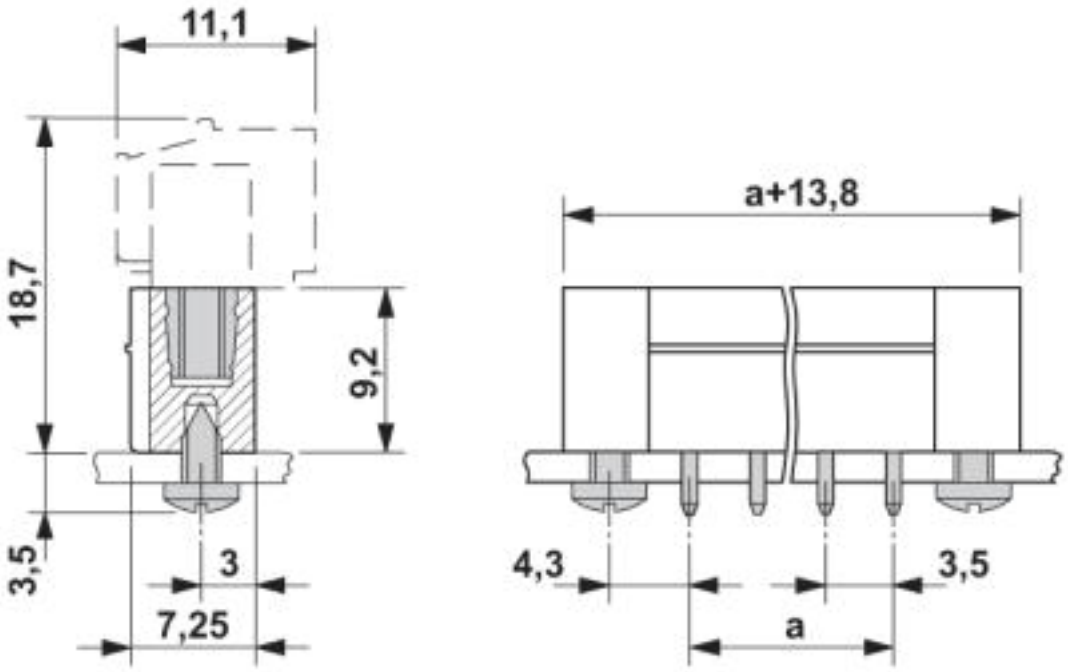


© Phoenix Contact 2013 - all rights reserved
http://www.phoenixcontact.com