Mini 1308

Luidspreker en geluidscapsule

Specificatieblad
Status: 09/2026

Importeur

Naam en adres	Tams Elektronik GmbH Fuhrberger Str. 4 | 30625 Hannover | Duitsland
Artikelnummer van de importeur	70-03033-01
Inhoud van de levering	1 luidspreker, 1 geluidscapsule

Technische gegevens

Nettoafmetingen	13 x 8 x 2,5 mm (± 0,2 mm)
Afmetingen met geluidscapsule	13 x 8 x 6,3 mm (± 0,2 mm)
Nominale belasting	0,7 W
Maximale belasting	1,0 W
Nominale impedantie	6 Ohm (± 20%)
Frequentiebereik (-10 dB)	600–20.000 Hz
Gemiddeld geluidsdrukniveau	88 ± 3 dB (1 W/1 m)
Resonantiefrequentie fs	850 Hz (± 20%)
Lengte van de aansluitkabel	40 mm
Nettogewicht	0,8 g
Gewicht inclusief geluidskapsel	1,0 g
Materiaal geluidscapsule	PLA (polylactide)

Fabrikant van de luidspreker

Naam en adres	Shenzhen Kaiboer Electronic Technology Co., Limited | China
Benaming van de fabrikant	1308 Speaker
Artikelnummer van de fabrikant	KB130806S2.5HL

tams elektronik

SPECIFICATION

SHEET FOR APPROVAL

Customer：

Nomenclature： **1308 SPEAKER**

Item No.：

Your Part No.：

Our Part No.： **KB130806S2.5HL**

Version： V1.0

Date： 2019.10.10

CUSTOMER 客户	APPROVER 审批	CHECKER 制作

深圳市凯博尔电子科技有限公司

深圳市宝安区航城街道黄田三力工业园 6 栋 3 楼

Tel:+86-0755-2733 3691 Web: www.szkber.com

Fax:+86-0755-2733 3690 Email: szkber@126.com

1	产品概要/PRODUCT OUTLINE	
	1-1 适用范围/SCOPE	This specification is applied to mobile telephone
	1-2 尺寸/DIMENSIONS	As shown in fig (3)
	1-3 大小/SIZE	（L）13.0×（W）8.0×（H）2.5(±0.2 mm)
	1-4 重量/NET WEIGHT	APPROX. 0.8g
2	标准试验状态 Standard Test Condition	一般规格试验状态（特殊要求除外） 常温 15～35℃，常湿 45%～85%，气压 860～1060hPa 但判定上有疑问时，试验状态为： 温度 20±2℃，相对湿度 60%～70%，气压 860～1060hPa
		The test conditions unless otherwise specified should be Normal temperature 15 to 35℃,Normal humidity 45 to 85% And normal atmospheric pressure 860 to 1060hPa However,if there arises a doubt in judgement,the test conditions shall be as follows: Temperature 20±2℃ Humidity 60%～70% Atmosphere 860～1060hPa

PREPARED	CHECKED	APPROVED
Liu	*Wang*	*Li*

	电气规格/ELECTRICAL SPECIFICATIONS	
3	3-1 输出音压位准 SOUND PRESSURE LEVEL	88±3dB SPL /2.0Vrms/10cm at （ AVG 0.8,1.0,1.5 2.0）KHz in 1cc box
	3-2 阻抗 IMPEDANCE	6±20% Ω /1.0V at 2000Hz
	3-3 频宽回应 FREQUENCY RESPONSE	As shown in fig(2)
	3-4 额定输入功率 Rate Input Power	0.7W In 1cc Box
	3-5 最大输入功率 Max Input Power	1.0W In 1cc Box For 1 Minute
	3-6 异常音测试 Buzzes & Rattles	Must be free audible noise （In 1cc Box） (From 300 Hz to 3.4KHz frequency range,Input:2.0V)
	3-7 最低共振频率 LOWEST RESONANCE FREQUENCY	850±20% Hz in free air at 1.0Vrms/10cm. 1000±20% Hz while testing in 1cc box at 2.0Vrms/10cm
	3-8 有效频宽 FREQUENCY RANGE	F0～20KHz
	3-9 失真 TOTAL HARMONIC DISTORTION	15%MAX. at 800~1200Hz, 2.0rms/10cm 10% MAX. at 1201~5KHz, 2.0rms/10cm
	3-10 工作温度 OPERATING TEMPERATURE	-20℃ to +80℃
	3-11 贮存温度 STORE TEMPERATURE	-30℃ to +85℃

PREPARED	CHECKED	APPROVED
Liu	*Wang*	*Li*

4	信赖性试验/RELIABLE TEST	
	4-1 概述 GENERAL	After any following tests the response at 1 K Hz shall not deviate more than ±3 dB from the initial value
	4-2 负载试验 LOAD TEST	输入电压 / Input Power : 2.0V 输入信号 / Input Signal : white noise (In 1cc Box) 时 间 / Duration : 96 hours 试验后放置时间 / Duration of Recovery : 4hrs of conditions at 20℃
	4-3 湿度试验 HUMIDITY TEST	温 度 / Temperature : +40℃±3℃ 相对湿度 / Relative Humidity : 90%~95% R.H. 时 间 / Duration : 96 hours 试验后放置时间 / Duration of Recovery : 4hrs of conditions at 20℃
	4-4 低温试验 LOW TEMPERATURE TEST	温 度 / Temperature : -40℃±3℃ 时 间 / Duration : 96 hours 试验后放置时间 / Duration of Recovery : 4hrs of conditions at 20℃
	4-5 高温试验 HIGH TEMPERATURE TEST	温 度 / Temperature : +85℃±3℃ 时 间 / Duration : 96 hours 试验后放置时间 / Duration of Recovery : 4hrs of conditions at 20℃
	4-6 温度循环试验 TEMPERATURE CYCLES TEST	TEMPERTURE: 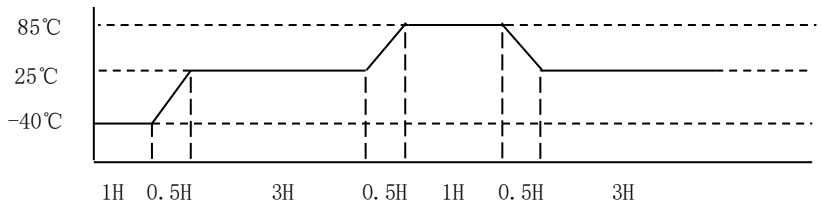 循环次数 / Cycles : 10 Cycles 试验后放置时间 / Duration of Recovery : 4hrs of conditions at 20℃
	4-7 落地试验 TEST DROP TEST	落下方向 / Direction : 1 corner,3 sides,6 faces 落下回数 / Times : Once in each directions 高 度 / Height : From 0.7m(on the concrete) 试验后放置时间 / Duration of Recovery : 4hours of conditions at 20℃ 依包装实体一角三棱六面作自由落体试验后,实体外观需正常
	4-8 振动试验 VIBRATION TEST	振 动 / Vibration : 10-55Hz (In 1cc Box) 振 幅 / Amplitude : 1.5mm 时 间 / Times : 1 hour in each of 3axes 试验后放置时间 / Duration of Recovery : 4hrs of conditions at 20℃

PREPARED	CHECKED	APPROVED
Liu	*Wang*	*Li*

5

ELECTRICAL AND ACOUSTICAL MEASURING CONDITION (fig.1)

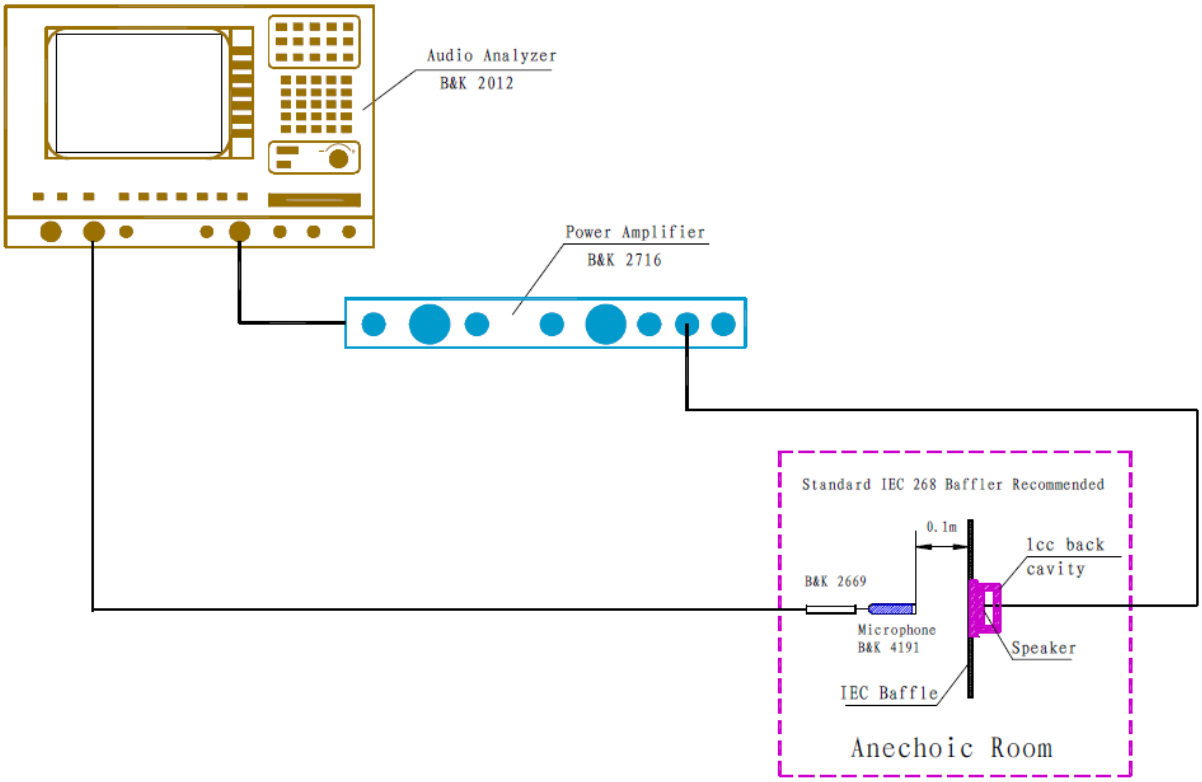

Fig.1 Illustration of measuring diagr.am (speaker mode)

Efficiency

Source Impedance Zs=0 Ohms

Open-Circuit Level 0.1W/10cm

PREPARED	CHECKED	APPROVED
Liu	*Wang*	*Li*

6

FREQUENCY RESPONSE （fig.2）

MYLAR SPEAKER

EFFICIENCY 88±3dB (0dB=20.0μPa)at S.P.L
测试条件:2.37Vrms/10cm in 1cc BOX

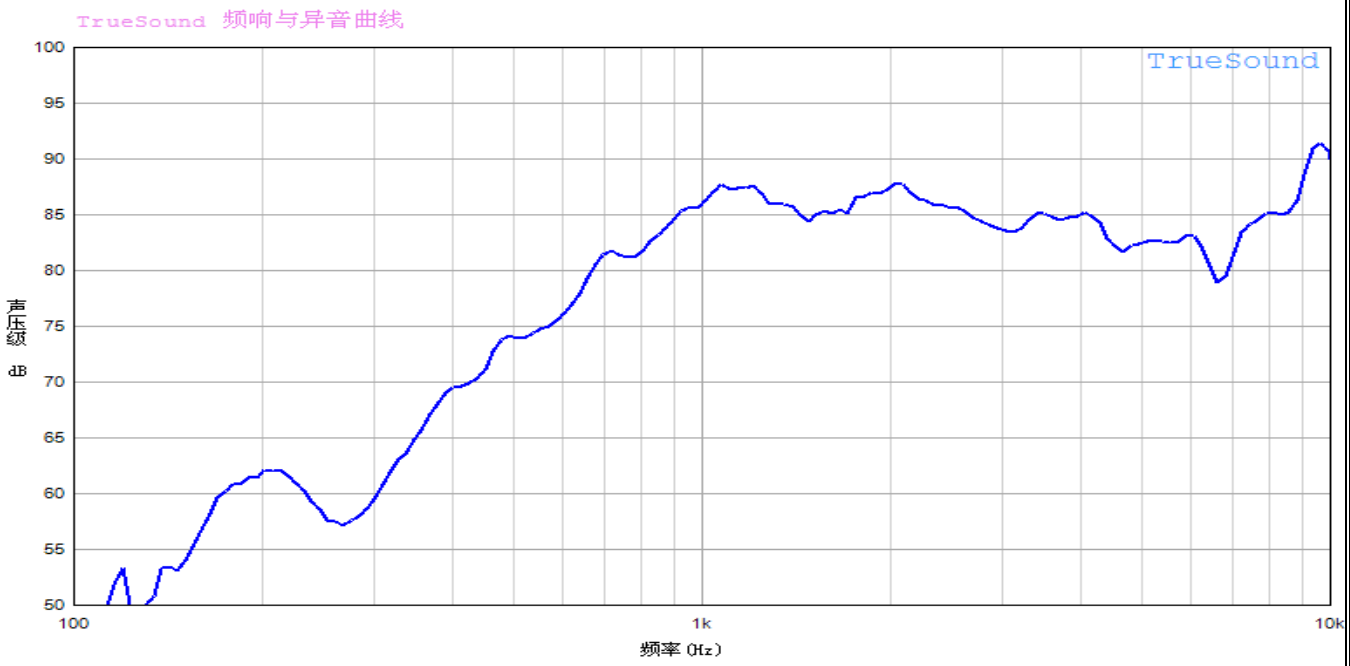

Efficiency
Source Impedance Zs=0 Ohms

PREPARED	CHECKED	APPROVED
Liu	*Wang*	*Li*

7

DIMENSIONS（fig.3）

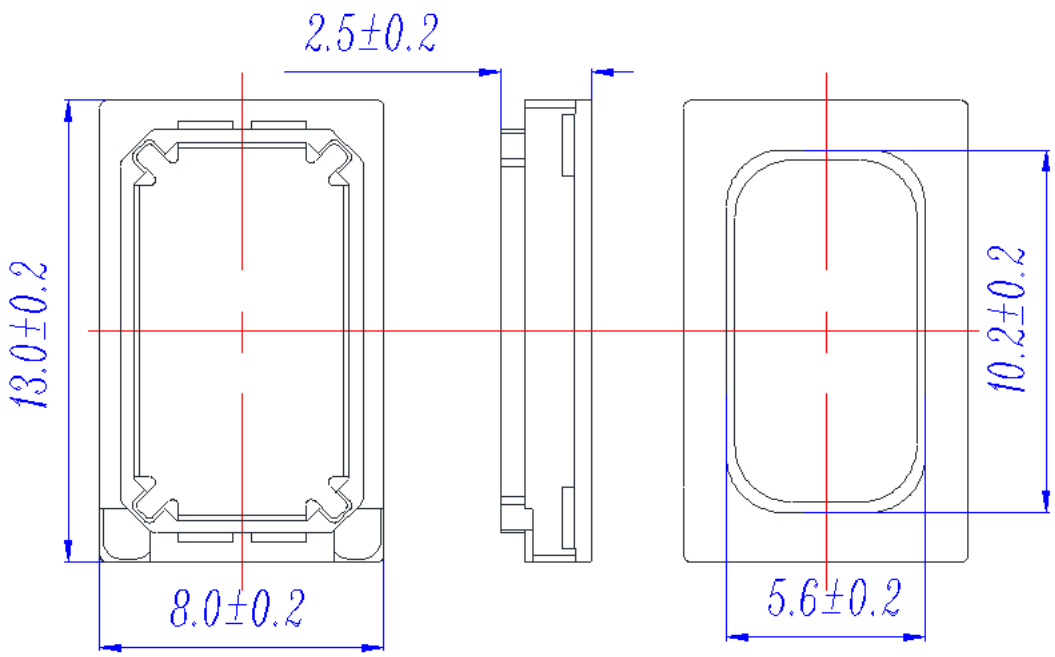

Bill of Material

ITEM	DESCRIPTIONS	REMARK	QTY	REMARK
8	Cover	PC	1	ROHS
7	Polarity Plate	Fe	1	ROHS
6	Magnet	Nd-Fe-B	1	ROHS
5	PIN	Cu+Au	1	ROHS
4	Voice coil	CU	1	ROHS
3	Yoke	Fe	1	ROHS
2	Cone	peek	1	ROHS
1	Frame	PBT	1	ROHS

PREPARED	CHECKED	APPROVED
Liu	*Wang*	*Li*

PRODUCT PACKAGE（fig.4）

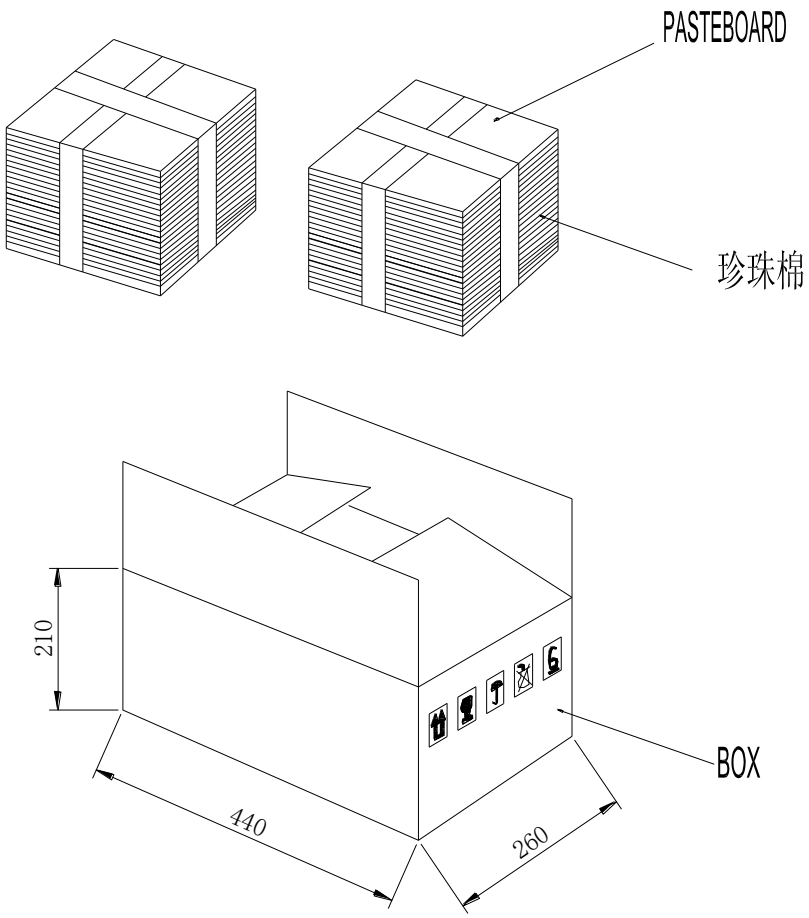

UNIT:MM

NOTES:

1. 100 PCS PER TRAY PE PAN.
2. 2000 PCS PER CARTONS.
3. 2 CARTONS PER BOX.
4. 2000 PCS PER BOX.

PREPARED	CHECKED	APPROVED
Liu	Wang	Li